TANDY®

Service Manual

26-1070

Addendum to the Model 4 and Model 4 Gate Array Service Manual

(Cat. No. 26-1067/8/9)

for

Model 4D

(Cat. No. 26-1070)

CUSTOM MANUFACTURED FOR RADIO SHACK, A DIVISION OF TANDY CORPORATION

Addendum to the Model 4 and Model 4 Gate Array Service Manual (Cat. No. 26-1067/8/9) for Model 4D (Cat. No. 26-1070)

Addendum to the Model 4 and
Model 4 Gate Array Service Manual
(Cat. No. 26-1067/8/9)
for
Model 4D
(Cat. No. 26-1070)

Copyright© 1985 Tandy Corporation

All Rights Reserved

Reproduction or use, without express written permission from Tandy Corporation, of any portion of this manual is prohibited. While reasonable efforts have been taken in the preparation of this manual to assure its accuracy, Tandy Corporation assumes no liability resulting from any errors or omissions in this manual, or from the use of the information obtained herein.

Introduction

The Model 4 and Model 4D are the same except for the floppy disk mount, the drive and its connecting cable and the keyboard. The new keyboard has a Backspace key that is functionally identical with the Left Arrow Key. These differences are reflected in the following pages, which are applicable to the Model 4D.

The symbol references of the Exploded View Parts List Differences (next page) correspond to those in the exploded view in Part 1, Section VIII of the Model 4 and Model 4 Gate Array Service Manual.

The symbol references of the Model 4 Gate Array PC Board Parts List Differences (next page) correspond to those in the Model 4 Gate Array PC Board Parts List in Part 2, Section II of the Model 4 and Model 4 Gate Array Service Manual.

The TEC FB-500 Series OEM Service Manual corresponds to Section V of the Model 4 and Model 4 Gate Array Service Manual.

Exploded View Parts List Differences for Model 4D #26-1070

Symbol	Qty	Description	Mfr's Part No.	RS Part No.
		Miscellaneous		
4	1	Keyboard *		8790555
6,7	1	Disk Drive Mount		8729547
42	1	Disk Drive Cable Assembly		8709629
58	1	Disk Drive Assembly		8790133

* Keyboard with Backspace key which is functionally identical with the Left Arrow Key.

Model 4 Gate Array PC Board Parts List Differences for Model 4D #26-1070

Sym	Description	Part Number
C2	Capacitor 47 pfd 50V C. Disk NPO	**8300473**
C20	Capacitor 33 pfd 50V C. Disk NPO	**8300335**

SERVICE MANUAL

MODEL FB-500 SERIES
ORIGINAL MAR., 1983 E0-2129
(REVISED)

DOCUMENT NO. E0-2129-G

REVISED:	1.	JUL., 1983	E0-2129
	2.	OCT., 1983	E0-2129-A
	3.	NOV., 1983	E0-2129-B
	4.	JAN., 1984	E0-2129-C
	5.	FEB., 1984	E0-2129-D
	6.	APR., 1984	E0-2129-E
	7.	JUL., 1984	E0-2129-F
	8.	DEC., 1984	E0-2129-G

TEC TOKYO ELECTRIC CO.,LTD.

PRINTED IN JAPAN

Contents

Chapter 1	Mechanical Section
Chapter 2	Electrical Section
Chapter 3	Circuit Diagram
Chapter 4	Troubleshooting
Chapter 5	Parts List
Chapter 6	Recommended Spare Parts List
Chapter 7	Special Maintenance Tools
Reference Document	Specification

CHAPTER 1 MECHANICAL SECTION

(FB-500 SERIES)

CHAPTER 1 MECHANICAL SECTION

REVISED	DATE	PAGE	REMARKS
E0-2129-C	1/84	CONTENTS	REQUIRE REVISIONS
		1- 7	"
		1- 8	"
		1- 9	"
		1-10	"
		1-14	"
		1-16	"
		1-17	"
		1-18	"
		1-20	"
E0-2129-C	2/84	1-17	"
		1-18	"
		1-21	"
E0-2129-E	4/84	1-13	"
E0-2129-E	4/84	1-13	"
		1-18	"
E0-2129-F	7/84	1-13	"
		1-18	"
E0-2129-G	12/84	1- 2	"
		1- 7	"
		1- 8∿30	"
		1-31	"

CONTENTS

1. DISK PROTECTION MECHANISM AND CLAMP MECHANISM 1- 1

2. INSTALLATION AND REMOVAL OF COMPONENTS 1- 2
2.1 PC Board 1- 2
2.2 Clamp Base BK and Clamp Arm K 1- 3
2.3 Carrier BK 1- 4
2.4 Pulse Motor BK 1- 5
2.5 Spindle Motor K 1- 6
2.6 Interrupter AK 1- 7

3. ADJUSTMENT 1- 8
3.1 DD Motor Speed Check 1- 8
3.2 Head/Radial Adjustment (CE Adjustment) 1- 9
3.3 Track 00 Adjustment 1-12
3.4 Index Sensor Adjustment 1-16
3.5 Head Azimuth Checking and Adjustment 1-19
3.6 Head Output Check 1-22
3.7 VR1 Adjustment 1-25
3.8 Checking by BRIKON TESTOR 1-27
3.9 Tensioning and Adjustment of Steel Belt 1-28

4. MAINTENANCE 1-31
4.1 Procedure for Cleaning the Read/Write Head 1-31
4.2 Caution on Handling Disks 1-31

1. DISK PROTECTION MECHANISM AND CLAMP MECHANISM

(1) The clamp mechanism of the FB-500 Series accurately centers the disk, thus lengthening the file of the disk.

(2) The shape of the front panel allows the disk to be inserted or removed easily.

2. INSTALLATION AND REMOVAL OF COMPONENTS

2.1 PC Board

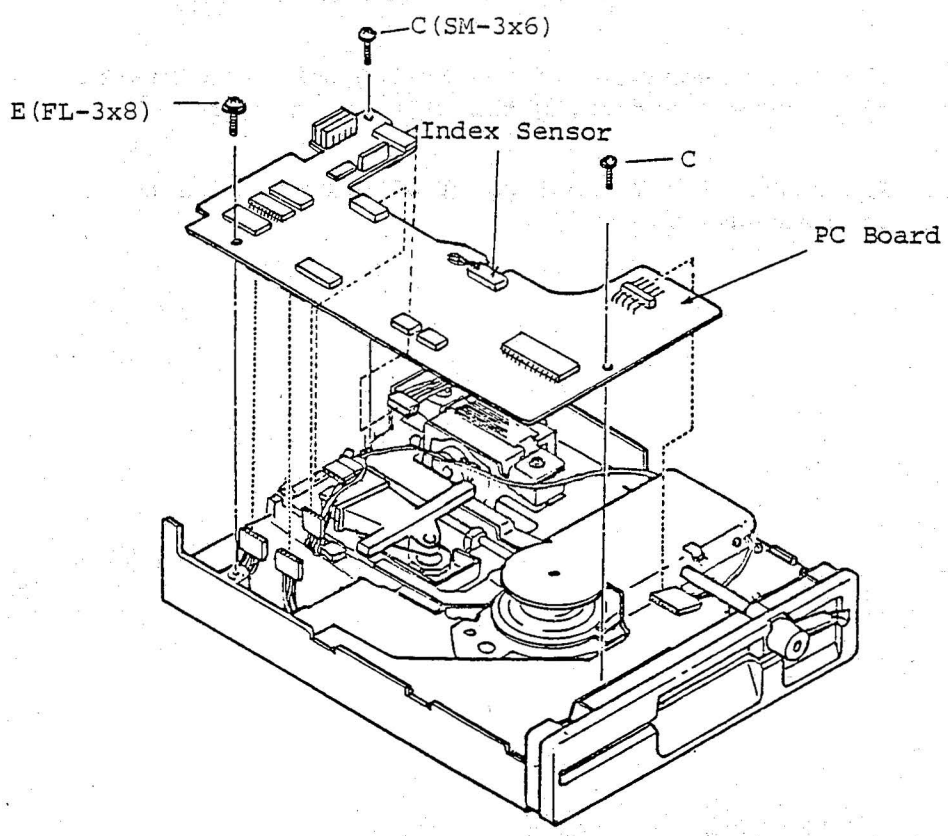

* Tool Used: Phillips Screwdriver

(1) Removal of PC Board

- o Remove the set screw E (1 pc) and C (2 pcs) retaining the PC board to the base.
- o Detach all the connector cables (Head, Step Motor, DD Motor, Zero Track Sensor).

(2) Installation of the PC Board

- o Attach the connector cables to the PC board.
  Make sure that the connector cables are properly routed.
  In the case of the double-side head, be extremely careful to distinguish the upper from lower head cables. The cables of the upper head are white-marked.
- o Tighten the set screws E (1 pc) and C (2 pcs) of the PC board.
- o The write protector and index sensor are directly mounted on the PC board. The write protector requires no adjustment while it is necessary to adjust the index sensor whenever it is mounted on the PC board.
  The index sensor should be adjusted by referring to Section 3.4 "Index Sensor Adjustment."

2.2 Clamp Base BK and Clamp Arm K

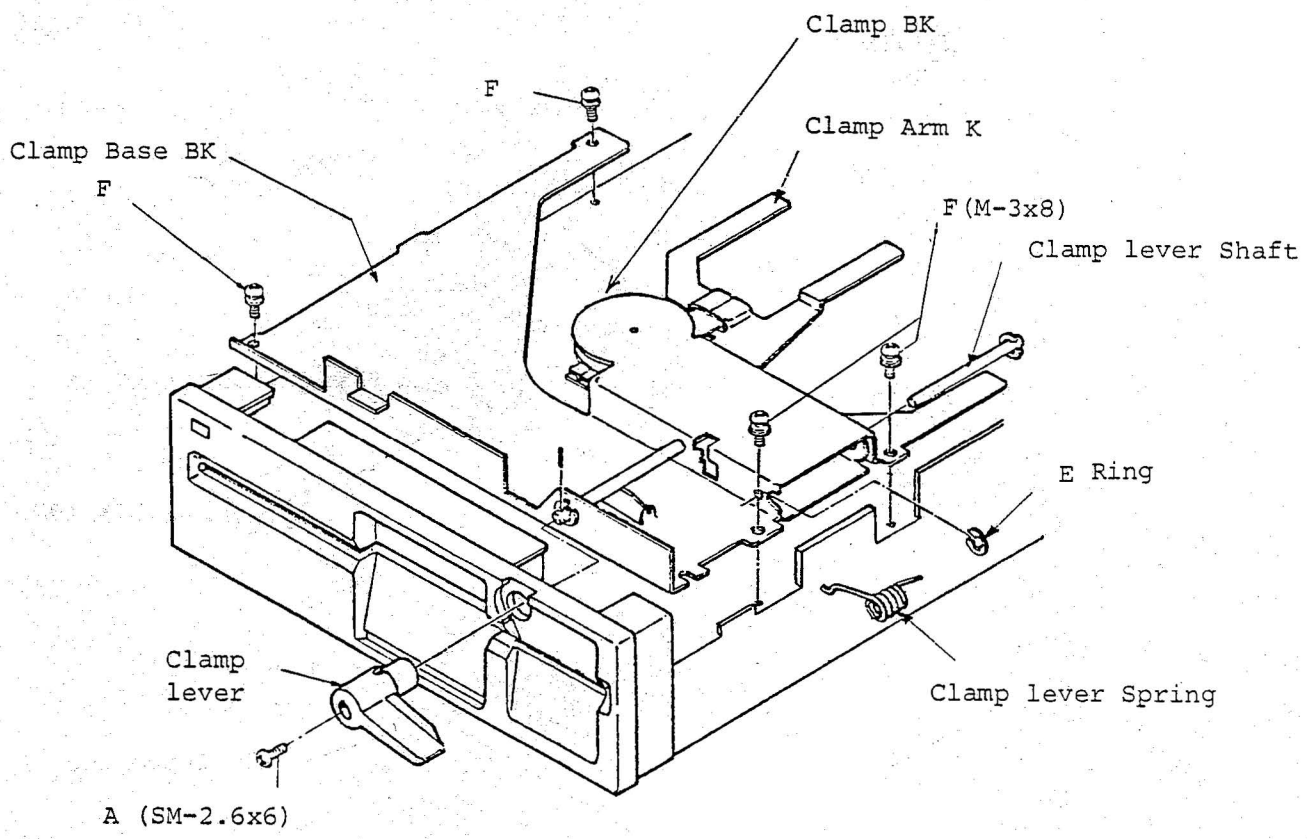

* Tools Used: Small and Large Phillips Screwdrivers, Pliers, Flat-blade Screwdriver.

(1) Remove the PC board by referring to the section 2.1(page 1-2).

(2) Remove the set screw A(1 pc) retaining the clamp lever, and pull out the clamp lever from the shaft.

(3) Remove the set screws F(4 pcs) retaining the clamp base BK.

(4) Remove the E-ring and clamp lever spring, and then pull out the clamp lever shaft.

(5) In the above procedure, the clamp arm K parts from the clamp base BK.

(6) The clamp BK can be removed by separating the clamp base BK from the base and pushing down the clamp arm.

(7) Follow the above procedure in reverse for re-assembly.

2.3 Carrier BK

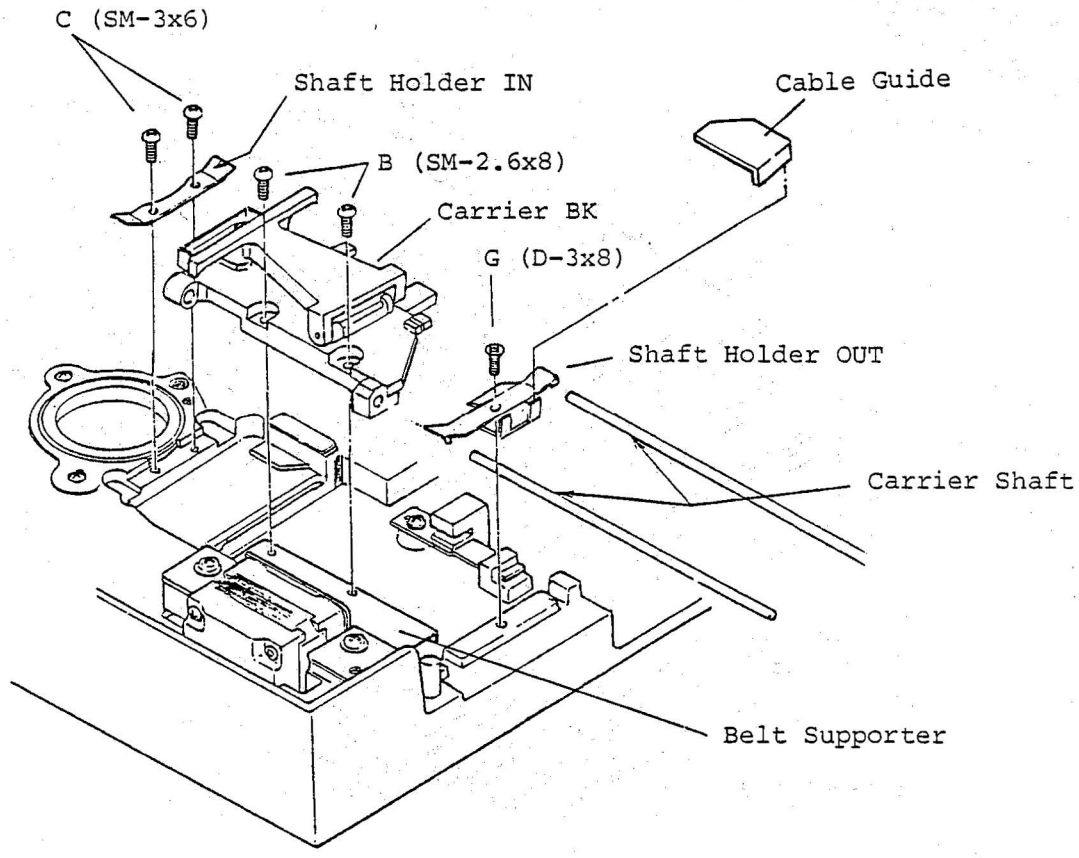

* Tools Used: Small and Large Phillips Screwdrivers

(1) Remove the PC board by referring to the section 2.1(page 1-2).

(2) Remove the clamp base BK by referring to the section 2.2(page 1-3).

(3) Remove the screws B(2 pcs) connecting the belt supporter to the carrier BK. At this time, be careful not to push down the belt.

(4) Remove the head cable.

(5) Remove the set screws C(2 pcs) and G(1 pc) of the shaft holders OUT and IN, and remove the shaft holders OUT and IN.

(6) Remove both carrier shafts. Use care not to damage the surfaces.

(7) When re-mounting the carrier, the adjustment requirements must be performed.

(8) Follow the above procedure in reverse for re-assebmly.

2.4 Pulse Motor BK

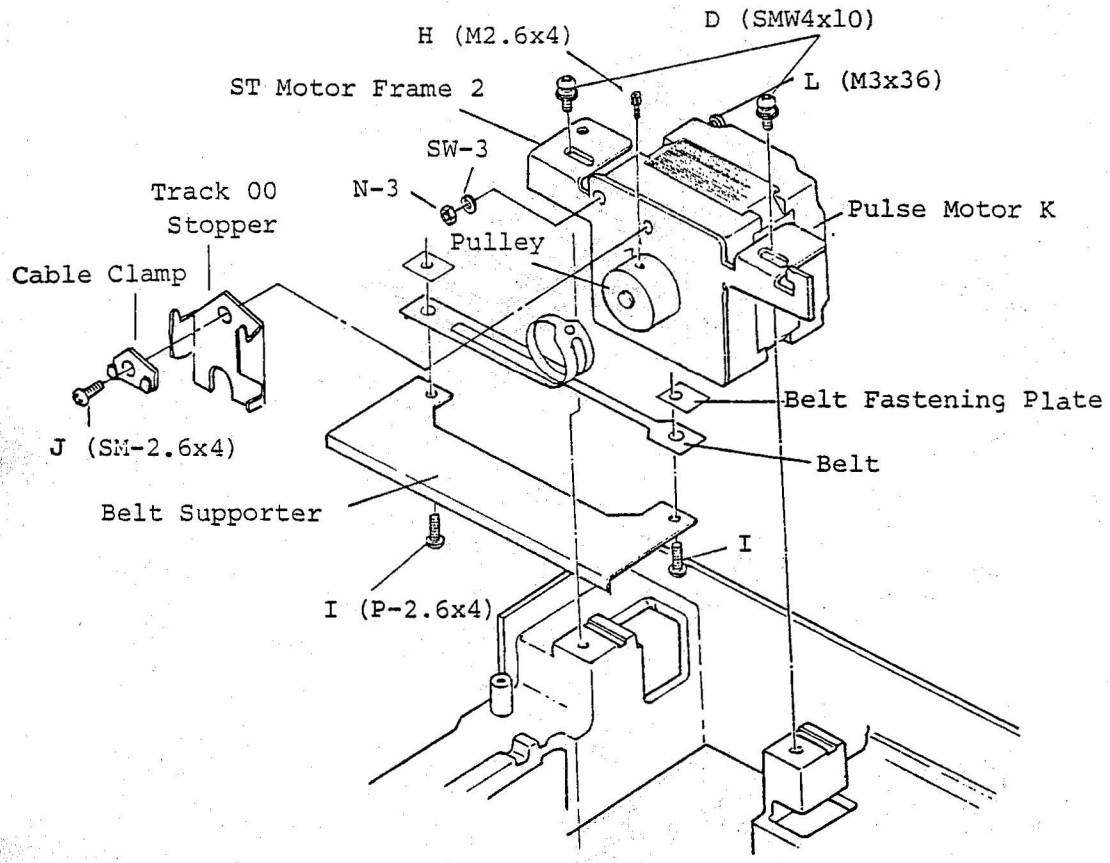

* Tools Used: Small and Large Phillips Screwdrivers

(1) Remove the carrier BK from the base by referring to section 2.3 (page 1-4).

(2) Remove the screws D(2 cps) positioning and retaining the pulse motor K.

(3) Loosen the screw securing ST motor frame 2, and remove N-3 and SW-3.

(4) Remove the set screw retaining the cable clamp and track 00 stopper.

(5) Remove the set screws I(2 pcs) of the belt supporter.

(6) Remove the pulley set screw H of the pulley, which is retaining the belt.

(7) Follow the above procedure in reverse for re-assembly, after adjusting the steel belt tension.

2.5 Spindle Motor K

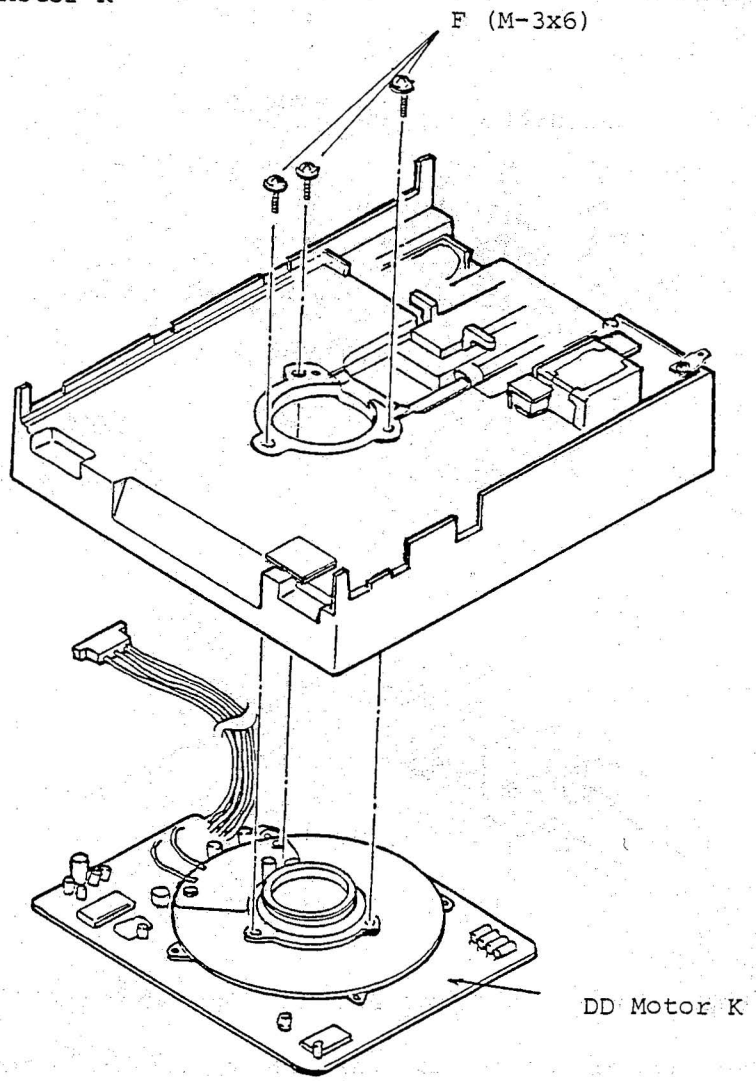

* Tool Used: Large Phillips Screwdriver

(1) Remove the PC board by referring to the section 2.1(page 1-2).

(2) Remove the clamp base BK by referring to section 2.2(page 1-3).

(3) Remove the mounting screws F(3 pcs) securing the D.D. motor, and remove the D.D. motor.

(4) Follow the above procedure in reverse for re-assembly.

2.6 Interrupter AK

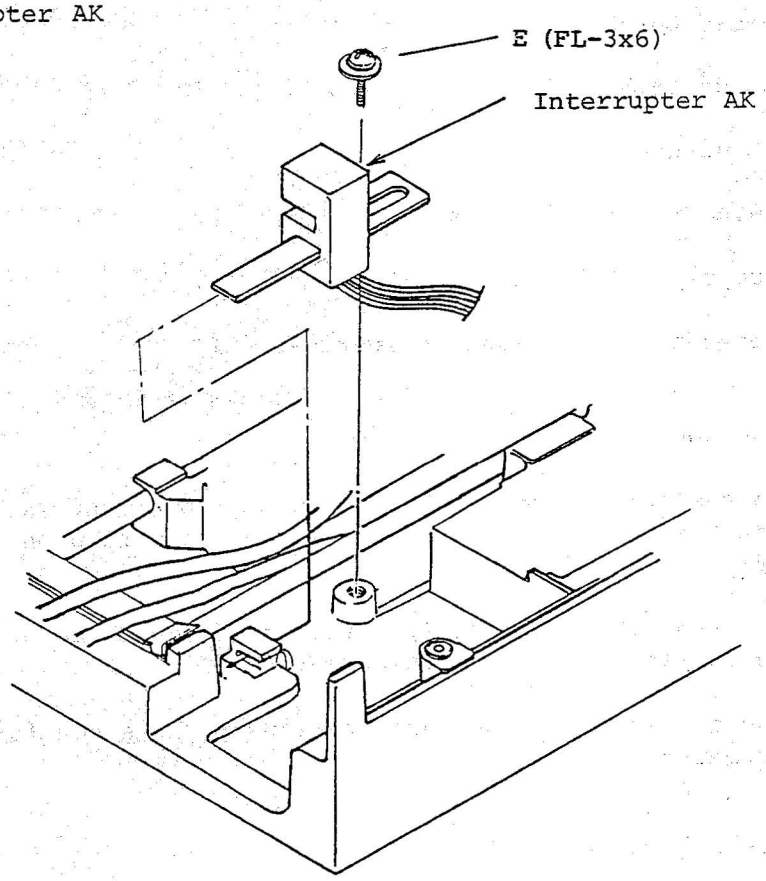

* Tool Used: Large Phillips Screwdriver

(1) Remove the PC board by referring to the section on 2.1(page 1-2)

(2) Remove the positioning set screw E of the interrupter AK.

(3) Muount the interrupter by temporarily tightening the positioning set screw screw and refferring to Section 3.3 Track 00 Adjustment.

3. ADJUSTMENT

3.1 DD Motor Speed Check

(A) Equipment to Be Used

(1) Work diskette

(2) Simulator (BRIKON tester)

(3) DC supply (+12V, +5V)

(4) Nonmagnetic flat-blade screwdriver (M2)

(B) Test Method

(1) Place the drive under a 50Hz or 60Hz fluorescent lamp. Insert the work disk in the drive, and then turn on the DD motor.

(2) Ensure that the black striped patten of the DD motor stroboscope completely looks stationary.

(3) If the pattern does not look stationary, make the following adjustments.

(C) Adjustment Method

(1) Turn variable resistor VR1 on the DD motor PC board clockwise or counterclockwise to that the black striped pattern will look completely stationary.

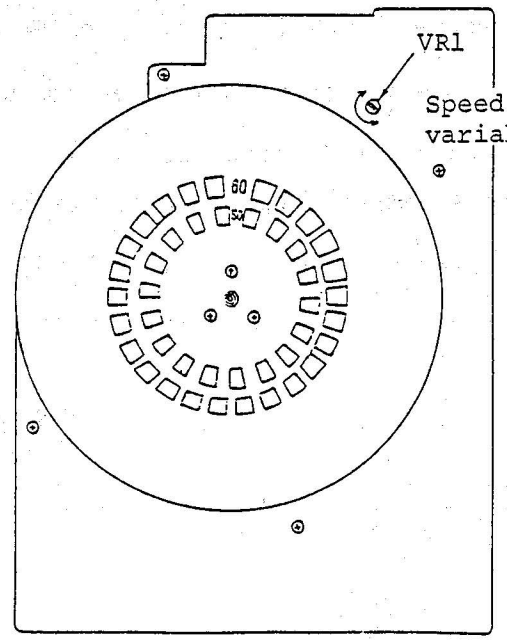

(DD motor PC board)

(D) Checking After Adjustment

Check the speed with the BRIKON tester by referring to section 3.8.

3.2 Head Radial Adjustment (CE Adjustment)

(A) Equipment to Be Used

(1) Alignment Diskette

(2) Oscilloscope

(3) Simulator (BRIKON tester, etc.)

(4) DC supply (+12V, +5V)

(5) Phillips screwdriver (M4)

(B) Test Method

(1) Connect the oscilloscope to the following check pins.

CPU PC Board

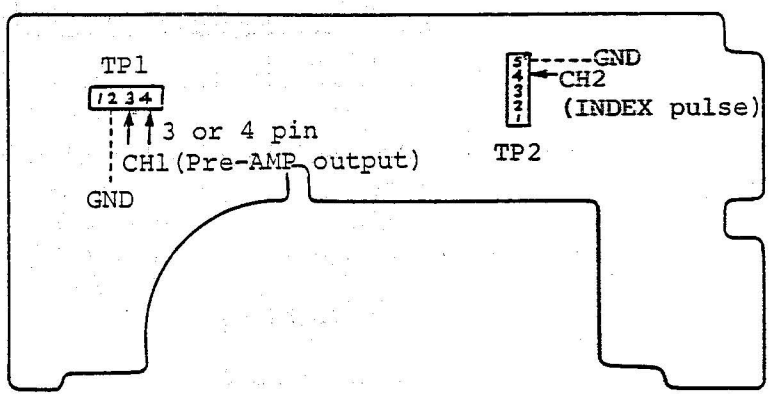

(2) Set the controls of the oscilloscope as follows:

- o Probe ..... 10 : 1
- o VOLT/DIV(CH1) ..... 20mV/DIV (AC)
- o VOLT/DIV(CH2) ..... 0.5V/DIV (DC)
- o TIME/DIV 20ms/DIV
- o DISPLAY ..... CHOP
- o TRIGGER ..... On the rise of CH2
- o TRIG. MODE ..... NORMAL

(3) Insert the alignment diskette.

CAUTION: Allow the alignment diskette to stand at room temperature for at least 20 minutes prior to adjustment.

(4) Turn on the DD motor.

(5) Allow the carrier to step to track 16 (to track 32 in the case of double track).

(6) Operate the oscilloscope to produce the following waveforms.

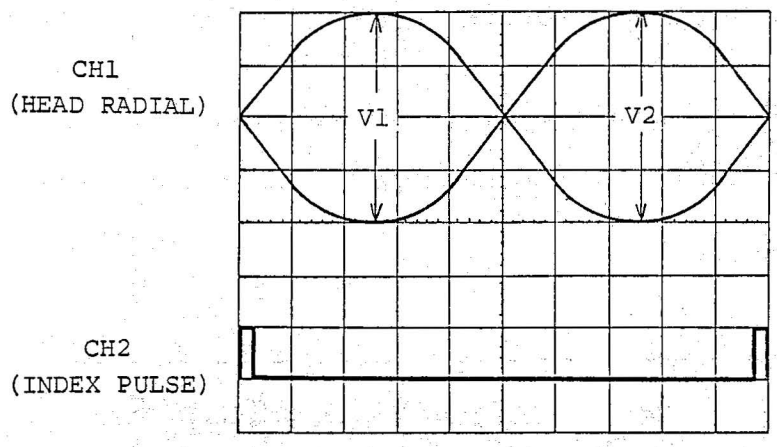

(7) Measure a CE value from V1 and V2, and ensure that the value is within the range below.

$$\frac{V2}{V1} \text{ or } \frac{V1}{V2} \times 100[\%] > 75[\%]$$

(8) If the value is not within the range, make the following adjustments. After adjustment, be sure to adjust track 00. For the FB-503 and 504, perform the same check for the side 1 head.

(C) Adjustment Method

o A temperature and humidity correction table is provided for the alignment diskette. At adjustment time, it is necessary to correct the measured value according to the table.

<u>In the case of the side 0 head of the FB-501 to 504</u>

(1) Loosen two mounting screws D retaining the pulse motor to the base.

(2) Move the pulse motor to the right or left so that the magnitudes of V1 and V2 of the head radial waveform will be the same.

(3) When the magnitudes of the V1 and V2 become the same, tighten mounting screws D.

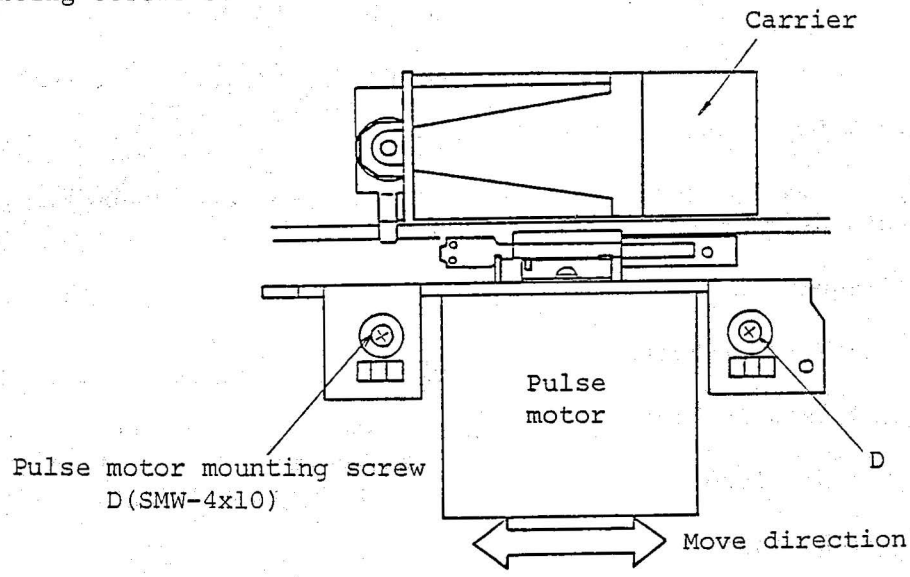

(4) After the carrier is further allowed to step to an inner and an outer track and then allowed to step to track 16 again (to track 32 in the casle of double track), ensure that the magnitudes of V1 and V2 are the same.

<u>In the case of the side 1 head of the FB-503 and 504</u>

o In this adjustment, do not move the mounting position of the pulse motor.

(1) Very slignly loosen two carrier mounting screws H for side 1. Then move the carrier backward or forward so that the magnitudes of V1 and V2 of the head radial waveform will be the same.

(2) When the magnitudes of V1 and V2 become the same, temporarily tighten mounting screws H, and check the head azimuth and index burst waveforms. If not good, readjust.

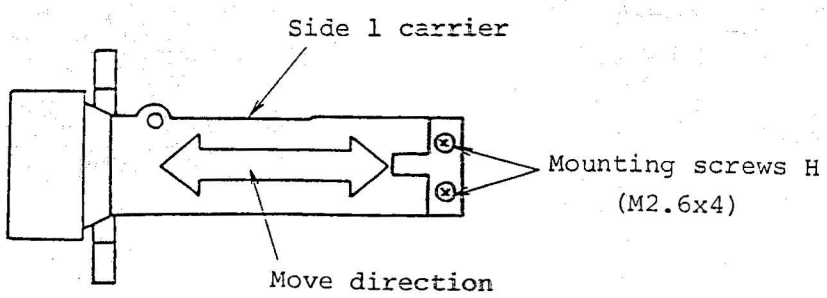

(3) After adjusting all of the head radial, head azimuth and index burst waveforms, tighten mounting screws H.

(4) After the carrier is further allowed to step to an inner and outer track and allowed to step to track 16 (to track 32 in the case of double track) again, make sure that the magnitudes of V1 and V2 of the CE waveform are the same.

3.3 Track 00 Sensor Adjustment

* Before making this adjustment, be sure to make the head radial adjustments by referring to Section 3.2.

(A) Equipment to Be Used

(1) Work diskette

(2) Oscilloscope

(3) Simulator

(4) DC supply (+12V, +5V)

(5) Phillips screwdriver (M2, M3)

(B) Test Method

(1) Connect the oscilloscope to the following check pins.

CPU PC board

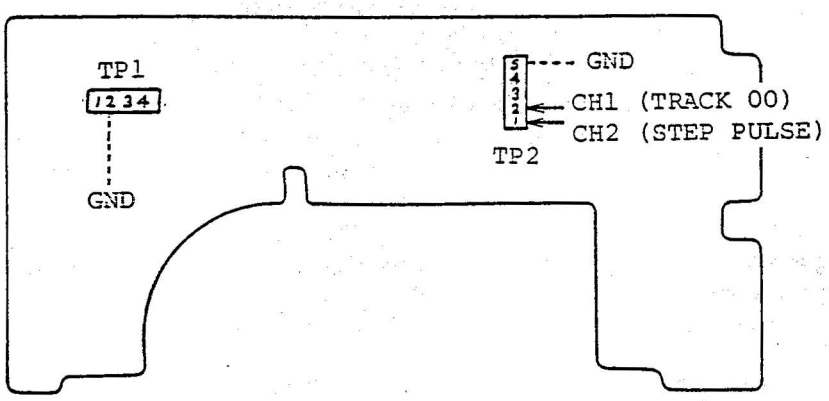

(2) Set the controls fo the oscilloscope as follows:

- o Probe ..... 10 : 1
- o VOLT/DIV(CH1) ..... 0.5V/DIV (DC)
- o VOLT/DIV(CH2) ..... 0.5V/DIV (DC)
- o TIME/DIV 1ms/DIV
- o DISPLAY ..... CHOP
- o TRIGGER ..... On the rise of CH2
- o TRIG. MODE ..... NORMAL

(3) Insert the work diskette, and turn on the DD motor.

(4) <u>In the case of the FB-501 and 503:</u>

Set the simulator to produce the STEP PULSE at 6ms intervals so that the carrier will move continuously between track 0 and track 2. (Note that the pulse motor reverse time should be 21ms min.)

<u>In the case of the FB-502 and 504:</u>

Set the simulator to produce the STEP PULSE at 3ms intervals so that the carrier continuously moves between track 0 and track 4. (Note that the pulse motor reverse time should be 18ms min.)

(5) Operate the oscilloscope to produce the following waveforms.

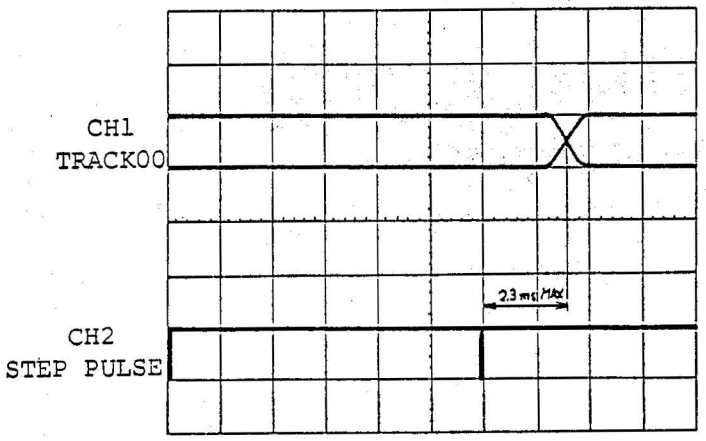

TRACK 00 waveform of FB-501 and 503

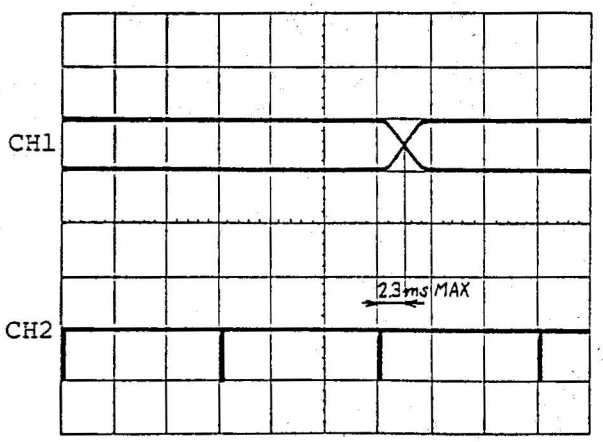

TRACK 00 waveform of FB-502 and 504

(6) Make sure that the TRACK 00 waveform is within the above range. If it is outside the above range, make the following adjustments.

(C) Adjustment Method

(1) Loosen mounting screw E securing the TRACK 00 sensor (interrupter) to the base.

(2) Adjust the TRACK 00 sensor position so that the rise and fall of the TRACK 00 waveform overlap. Then, tighten mounting screw E. The overlapping should occur a maximum of 2.3ms after the above above STEP PULSE.

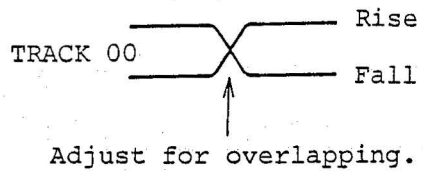

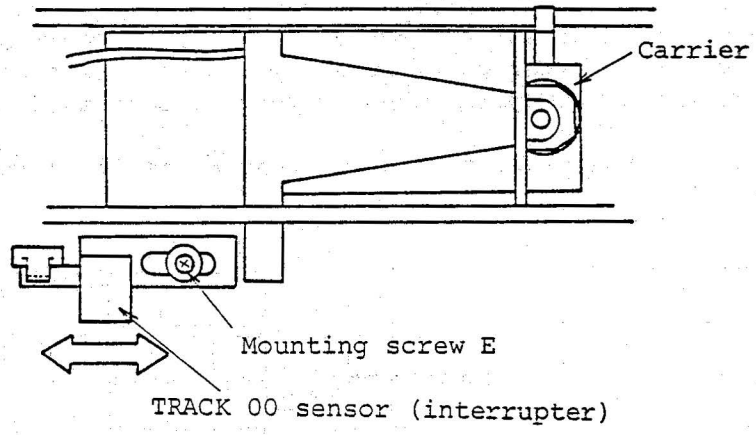

(3) TRACK 00 Stopper Adjustment

(a) Loosen one mounting screw J securing the cable holder (TRACK 00 stopper).

(b) Set the simulator so that the carrier reciprocates between track 4 and track 0.

(c) With the carrier reciprocating, place the clearance gauge between the cable holder and belt stopper and adjust the cable holder position by moving it to the right or left so that the following adjustment value will be obtained.

(d) After adjustment, tighten mounting screw J.

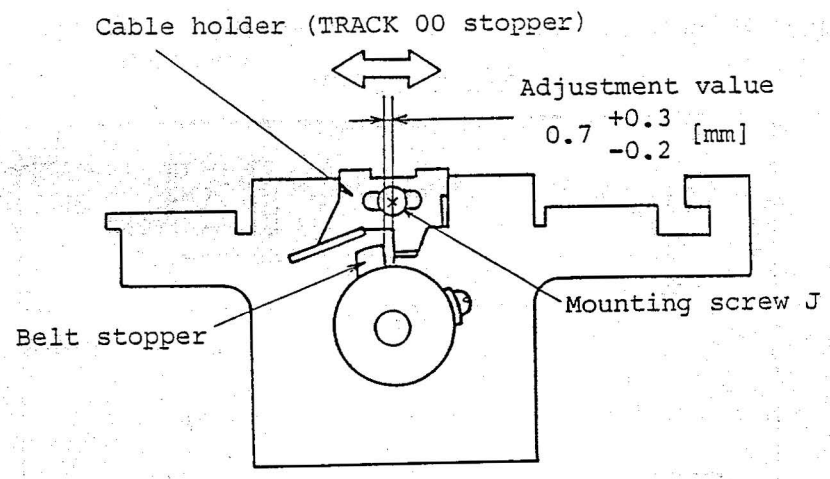

(D) Checking After Adjustment

Check the sensor with the BROKON tester by referring to Section 3.8.

3.4 INDEX Sensor Adjustment

(A) Equipment to Be Used

(1) Alignment diskette

(2) Oscilloscope

(3) Simulator

(4) DC supply (+12V, +5V)

(5) Precision Phillips screwdriver (M2)

(B) Test Method

(1) Connect the oscilloscope to the following check pins.

CPU PC Board

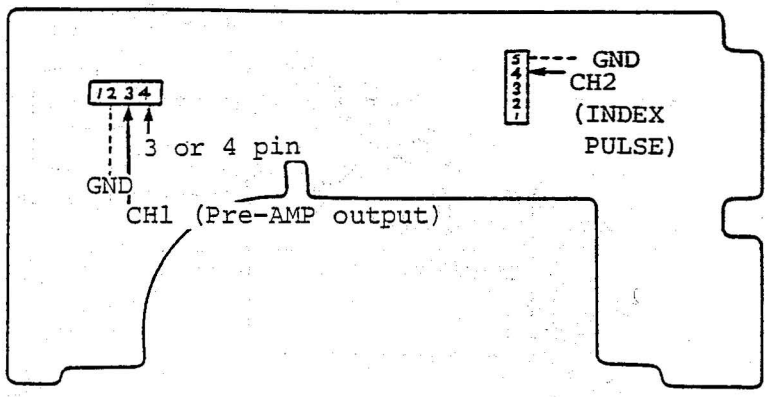

(2) Set the controls of the oscilloscope as follows:

- o Prove ..... 10 : 1
- o VOLT/DIV(CH1) ..... 20mV/DIV (AC)
- o VOLT/DIV(CH2) ..... 0.5V/DIV (DC)
- o TIME/DIV 50us/DIV
- o DISPLAY ..... CHOP
- o TRIGGER ..... On the rise of CH2
- o TRIG. MODE ..... NORMAL

(3) Insert the alignment diskette, and turn on the DD motor.

(4) Allow the carrier to step to track 1 (to track 2 in the case of double track).

(5) Operate the oscilloscope to produce the following waveforms. Measure INDEX BURST TIME T1.

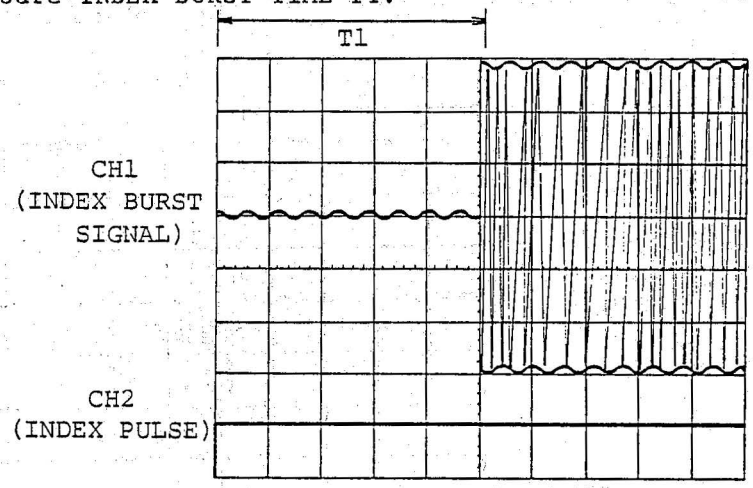

(6) If the value of T1 is not within the following range, make the adjustments described below.

T1 = Within 200μs ± 100 μs

(C) Adjustment Method

(1) Loosen one mounting screw K securing the INDEX sensor to the CPU PC board.

(2) Move the INDEX sensor innerly or outerly and temporarily fix it with amounting screw K so that the value of T1 will be within the above range.

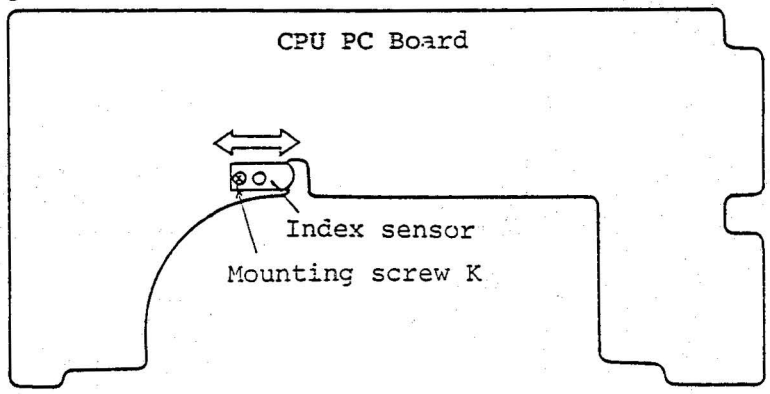

(3) Allow the carrier to step to track 34 (to track 68 in the case of double track).

(10) Operate the oscilloscope to produce the following waveforms. Measure index burst time T2.

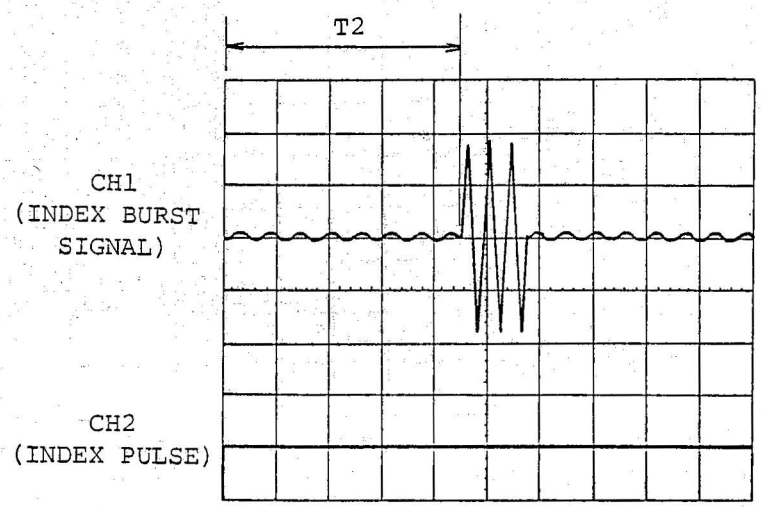

(11) Check to ensure that the value of T2 is within the following range. If it is outside the range, readjust the waveforms and make sure that T1 and T2 are within the range. Then tighten sensor mounting screw K.

T2 = Within T1 ± 50μs

(D) Checking After Adjustment

Check the index sensor with the BROKON tester by referring to Section 3.8.

3.5 HEAD AZIMUTH Checking and Adjustment

(A) Equipment to Be Used

(1) Alignment diskette

(2) Oscilloscope

(3) Simulator

(4) DC supply (+12V, +5)

(5) Precision Phillips screwdriver (M2)

(B) Test Method

(1) Connect the oscilloscope to the following check pins.

CPU PC Board

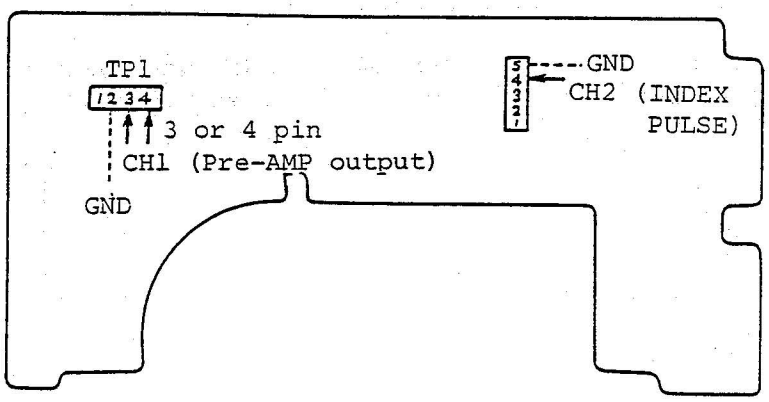

(2) Set the controls of the oscilloscope as follows:

- o Probe ..... 10 : 1
- o VOLT/DIV (CH1) ..... 10mV/DIV (AC)
- o VOLT/DIV (CH2) ..... 0.5V/DIV (DC)
- o TIME/DIV 0.5ms/DIV
- o DISPLAY ..... CHOP
- o TRIGGER ..... On the rise of CH2
- o TRIG. MODE ..... NORMAL

(3) Mount the alignment diskette, and turn on the DD motor.

(4) Allow the carrier to step to track 34 (to track 68 in the case of double track).

(5) Operate the oscilloscope to produce the following waveforms.

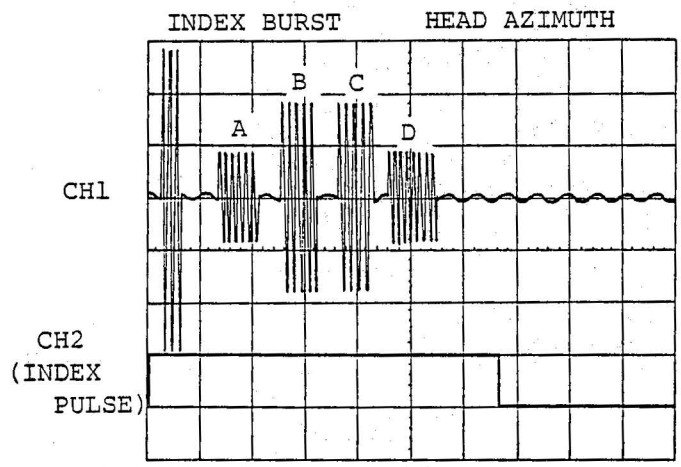

(6) Check to ensure that the HEAD AZIMUTH waveforms for side 0 and side 1 are of the following adjustment value.

$$\frac{V}{B} \text{ or } \frac{B}{C} \times 100[\%] \geqq 73.5[\%]$$

Where, $A \leqq B$ and $D \leqq C$

- o If the HEAD AZIMUTH waveform for the side 0 head is less that the above value, adjustment is impossible and the entire carrier must be replaced.
- o If the HEAD AZIMUTH waveform for the side 1 head is less than the above value, make the following adjustments.

(C) Adjustment Method

(1) Verly slightly loosen two carrier mounting screws for side 1. Adjust the carrier position by moving it to the right or left so that the above value will be 100%. Then tighten mounting screw H.

CAUTION: This adjustment causes the CE and INDEX BURST for the side 1 head to go wrong. Therefore, continue the adjustment until these three conditions (AZIMUTH, CE and INDEX BURST) are satisfied. The adjustment of the side 1 head requires delicacy; So do not adjust the head unnecessarily.

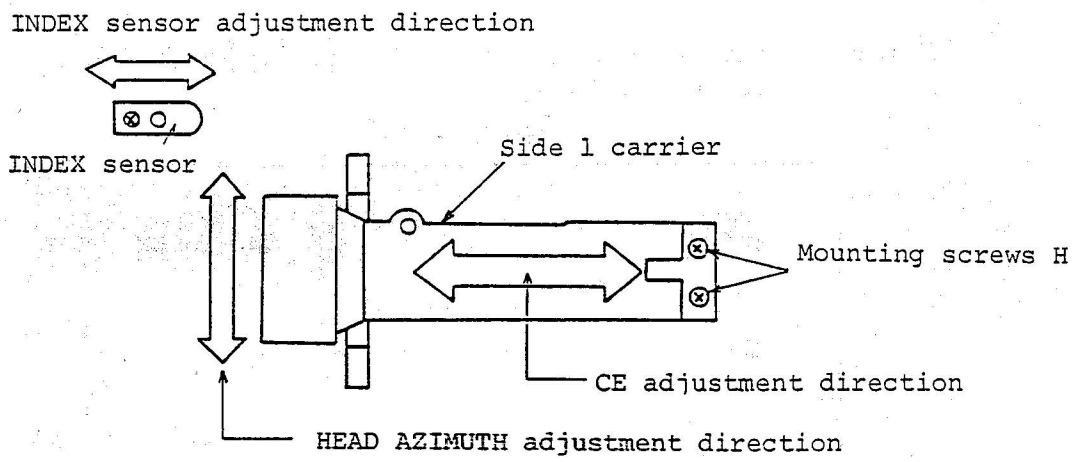

(D) Checking After Adjustment

Check the AZIMUTH with the BRIKON tester by reforring to Section 3.8.

3.6 Head Output Checking

(A) Equipment to Be Used

(1) Work diskette

(2) Oscilloscope

(3) Simulator

(4) DC supply (+12V, +5V)

(5) Flat-blade screwdriver (small)

(B) Check Method

(1) Connect the oscilloscope to the following check pins.

CPU PC Board

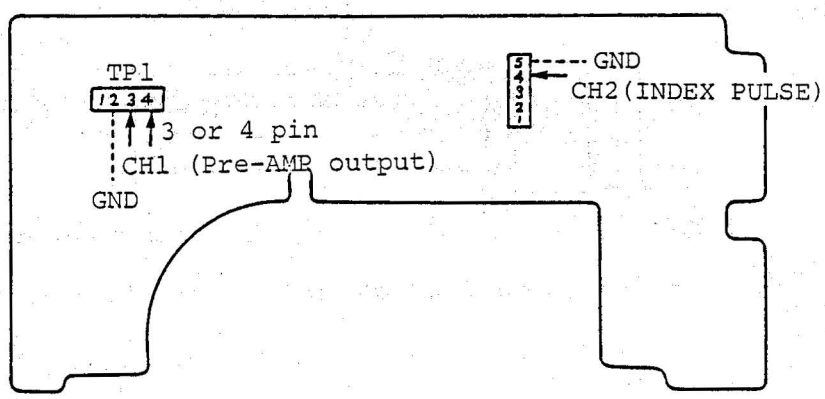

(2) Set the controls of the oscilloscope as follows:

- o Probe..... 10 : 1
- o VOLT/DIV (CH1) ..... 10mV/DIV (AC)
- o VOLT/DIV (CH2) ..... 0.5V/DIV (DC)
- o TIME/DIV 20ms/DIV
- o DISPLAY ..... CHOP
- o TRIGGER ..... On the rise of CH2
- o TRIG. MODE ..... NORMAL

(3) Insert the work diskette, and turn on the DD motor.

(4) Allows the carrier to step to track 39 (to track 79 in the case of double track).

(5) After writing the 2F signal with the simulator, read it.

(6) Operate the oscilloscope to produce the following waveforms.

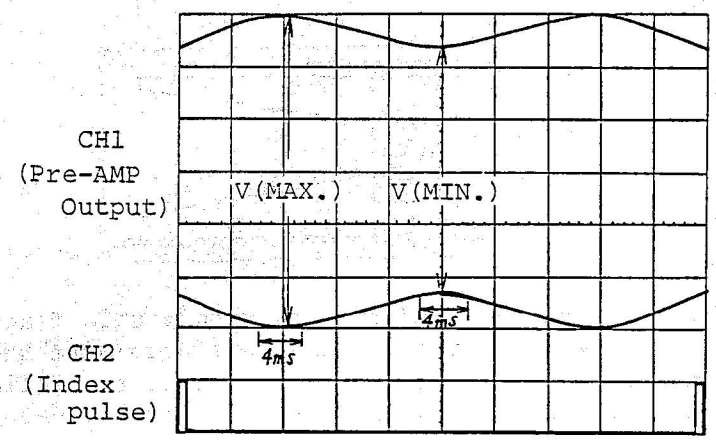

(7) Check the pre-AMP output voltage from the above waveform (CH1). The following values are obtained by doubling the output voltage of the above waveform.

Criteria

- o 48 TPI: Over 650mV p-p
- o 96 TPI: Over 420mV p-p

o If the above values are not satisfied, replace the work diskette and perform the same test.

(8) Check the modulation. Measure the V (MAX.) and V(MIN.) from the above waveforms, and find the modulation from the following formula.

Modulation: $$M = \left(\frac{V(MAX.) - V(MIN.)}{V(MAX.) + V(MIN.)}\right) \times 100[\%]$$

$$M \leqq 10\%$$

o Check to ensure that the modulation is 10% or less. If it is over 10%, make the following adjustments.

(C) Adjustment Method

This adjustment can be made only for the FB-501 and 502.

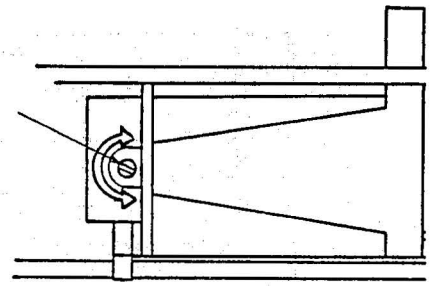

(1) Turn the pad at the load arm end with a thin flat-blade screwdriver while observing the waveforms with the disk turning so that the waveform similar to the following will be obtained. If the pad is worn, replace it before adjustment.

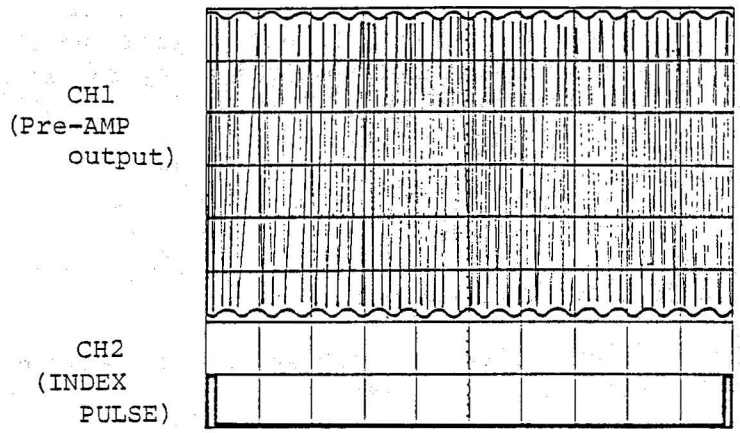

(2) After adjustment, adjust VR1 by referring to Section 3.7.

3.7 VR1 Adjustment

(A) Equipment to Be Used

(1) Work diskette

(2) Oscilloscope

(3) Simulator

(4) DC supply (+12V, +5V)

(5) Flat-blade screwdriver (small)

(B) Test Method

(1) Connect the oscilloscope to the following check pins.

CPU PC board

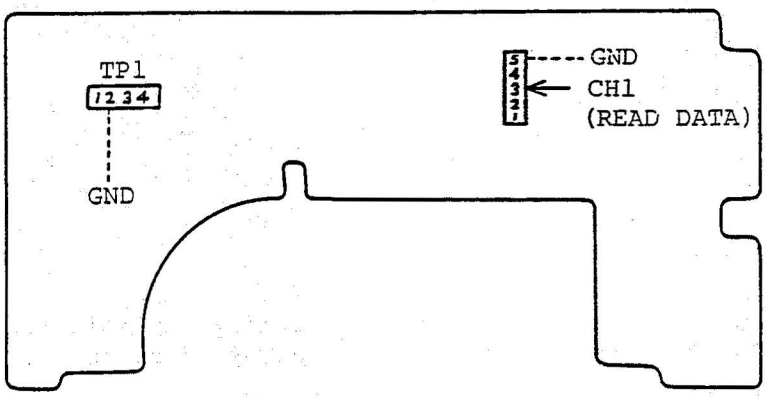

(2) Set the controls of the oscilloscope as follows:

- o Prove ..... 10 : 1
- o VOLT/DIV ..... 0.1V/DIV (DC)
- o TIME/DIV 1us/DIV
- o DISPLAY CH1
- o TRIGGER ..... On the rise of CH1
- o TRIG. MODE ..... NORMAL

(3) Insert the work diskette, and turn on the DD motor.

(4) Allow the carrier to step to track 39 (to track 79 in the case of double track).

(5) After writing the 2F signal with the simulator, read it.

(6) Operate the oscilloscope to produce the following waveform.

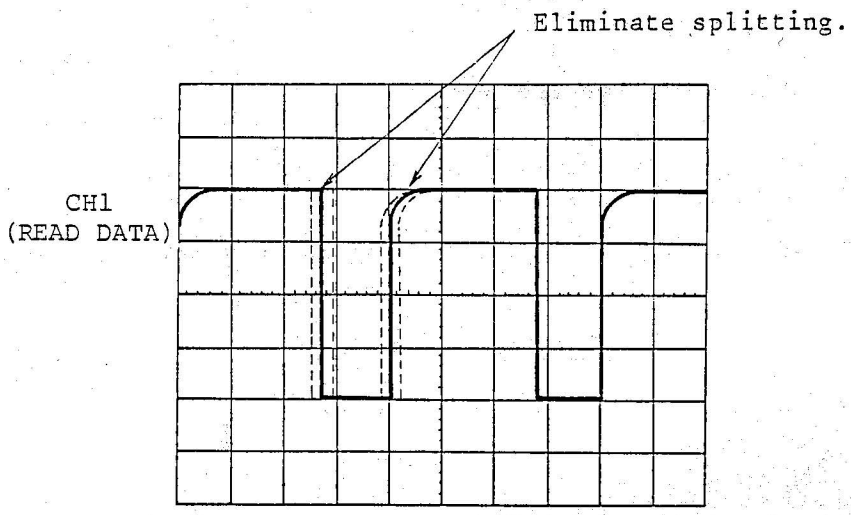

(7) Ensure that the above waveform is not trembling. If trembling, make the following adjustment.

(C) Adjustment Method

Adjustment the above waveform by turning variable resistor VR1 on the CPU PC board to the right or left so that the waveform is not trembling.

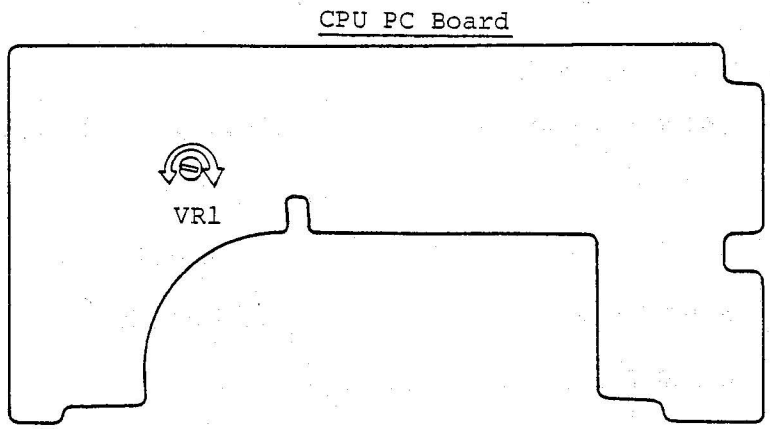

(D) Checking After Adjustment

Checking VR1 with the BRIKON tester by referring Section 3.8.

3.8 Checking by BRIKON Tester

(A) Equipment to Be Used

(1) Work diskette (diskette used by TEC: MEMOREX)

(2) BRIKON tester (Model 723)

(B) Check Method

(1) Perform an auto system test. The following should be satisfied.

(a)	Index Pulse Width	1 to 5.7msec.
(b)	DD Motor Speed	200 ± 6msec.
(c)	Read Test (1 cycle)	No error
(d)	Window Margin	Over 750nsec.
(e)	Step	48 TPI: 6msec.
		96 TPI: 3msec.
(f)	Asymmetry	Less that 700nsec.
(g)	Write/Read Test (1 cycle)	No error

(2) Perform a read test 10 times; no error should occur.

3.9 Tensioning and Adjustment of Steel Belt

* Tools Used: Hexagonal Wrench for M2.6, Small and Large Phillips Screwdrivers, Belt Tensioning Jig.

(1) Leave the pulse motor K only by referring to the section on pulse motor BK removal.

(2) Wind the steel belt on the pulley as shown in the left figure below, and temporarily fix it with the belt stopper and mounting screw H. Manually turn the pulley until the mounting screw H faces downward as shown in the right figure below.

Caution: Be sure to wear gloves when touching the steel belt.

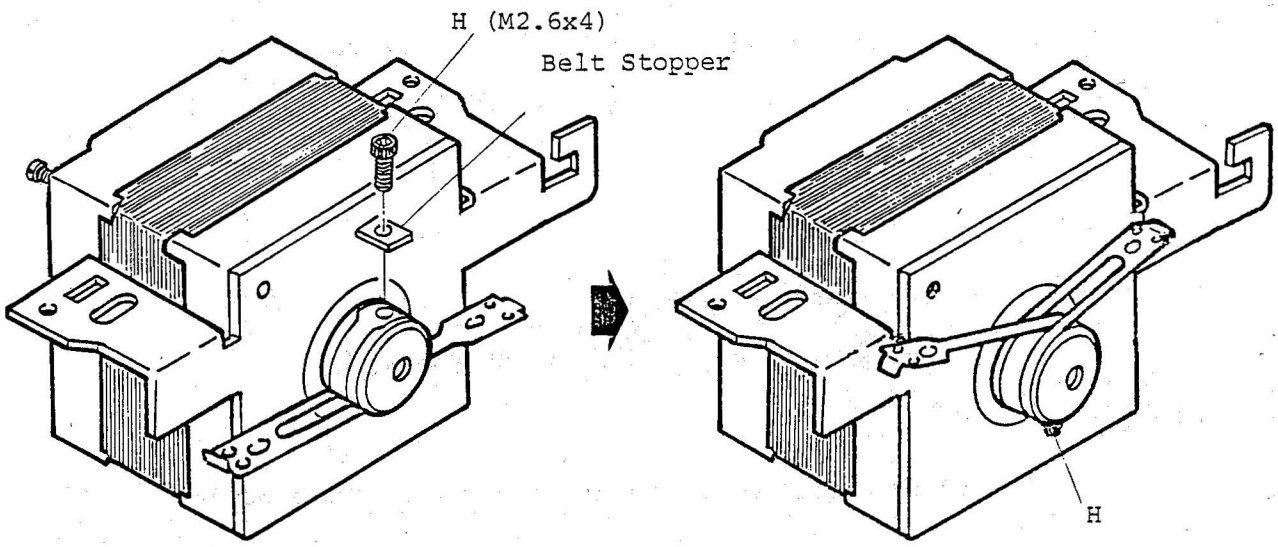

(3) Put the right and left ends of the steel belt between the belt supporter and belt holder plate as shown in the figure below, and temporarily fix them with the mounting screws I (2 pcs).

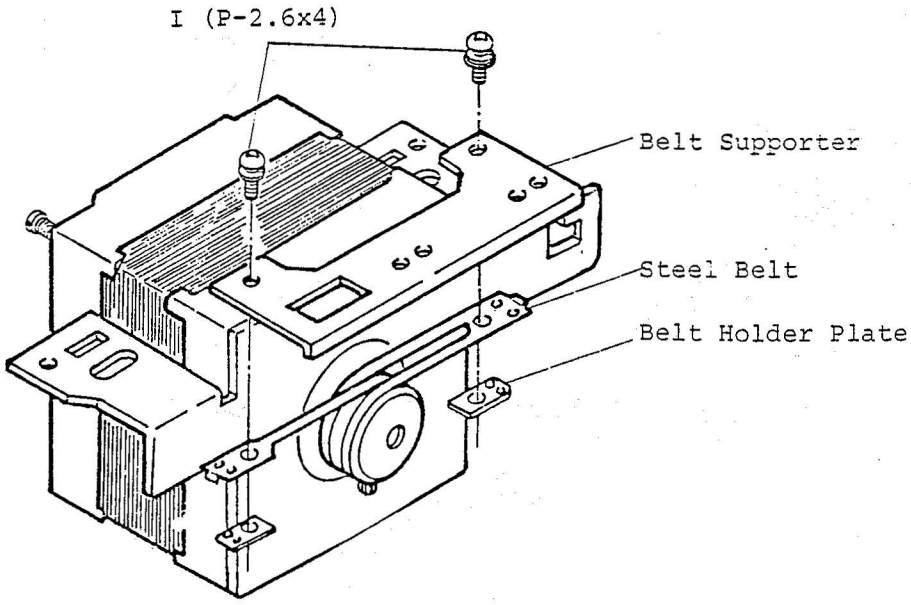

(4) Turn the lever of the jig until it is set horizontal as shown in the figure below. Then place the pulse motor K on the jig, allow the jig pins to be inserted into the right and left holes in the steel belt, and mount the pulse motor K on the jig with the mounting screws D (2 pcs).

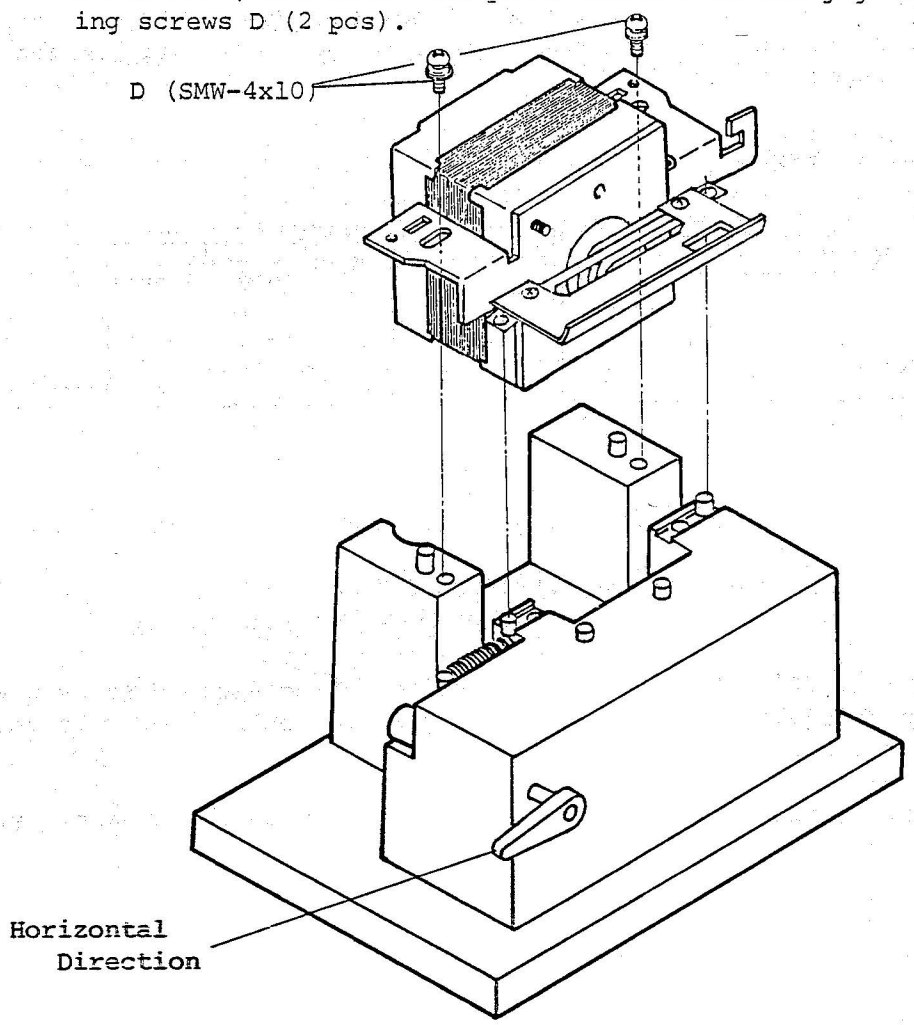

(5) Turn the lever of the jig until it is set vertical to tension the belt, and tighten the mounting screws I (2 pcs).

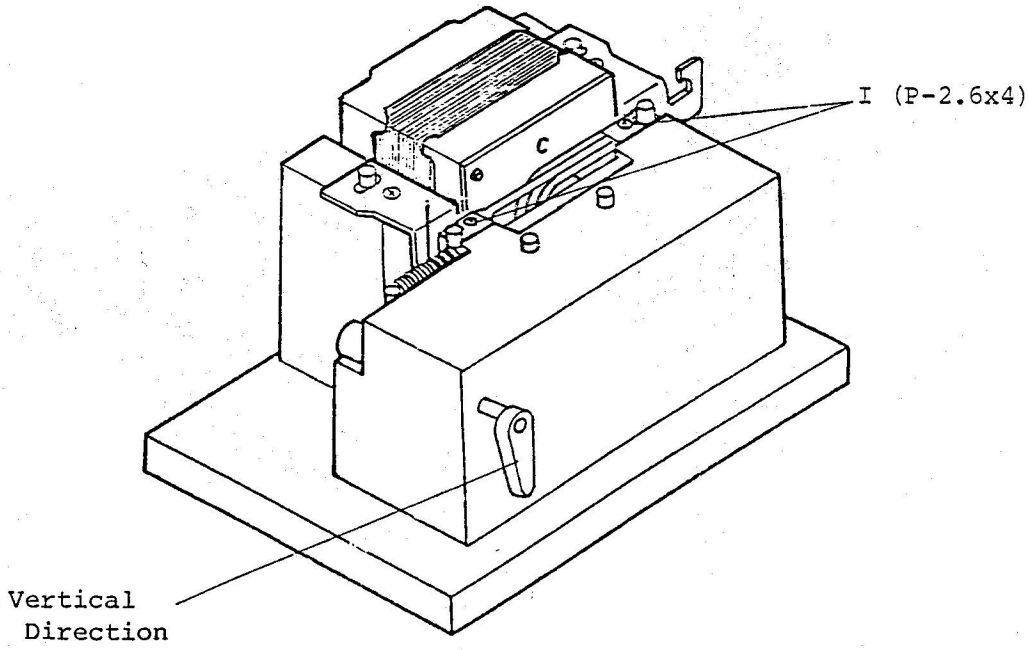

(6) Turn the lever of the jig until it is set horizontal again. Then remove the mounting screws D (2 pcs), and remove the pulse motor K from the jig.

(7) Tighten the mounting screw H. Check that the stell belt gaps A and B are uniform when the belt supporter is slided horizontally to the right or left.

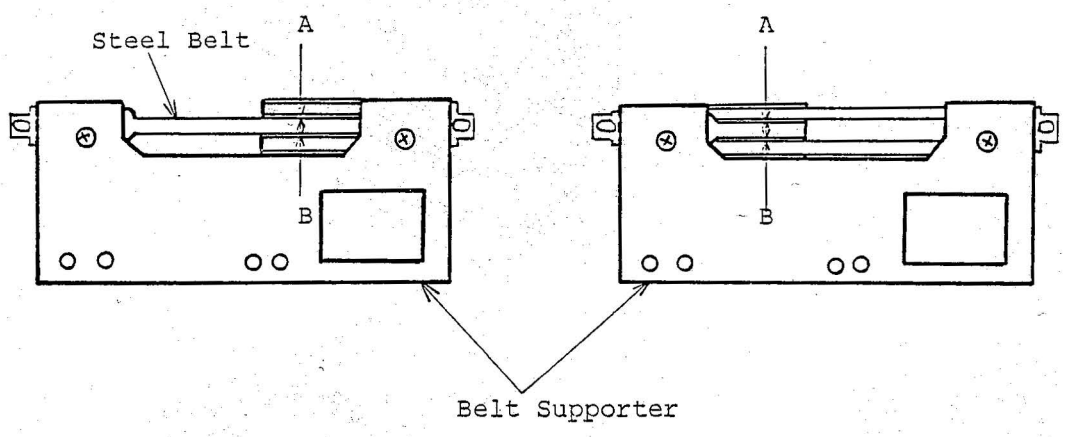

(8) Manually turn the pulley until the mounting screw H faces upward. Temporarily fix the track 00 stopper and cable clamp with the mounting screw J.

Finally, tighten the nut and spring washer in the original state.

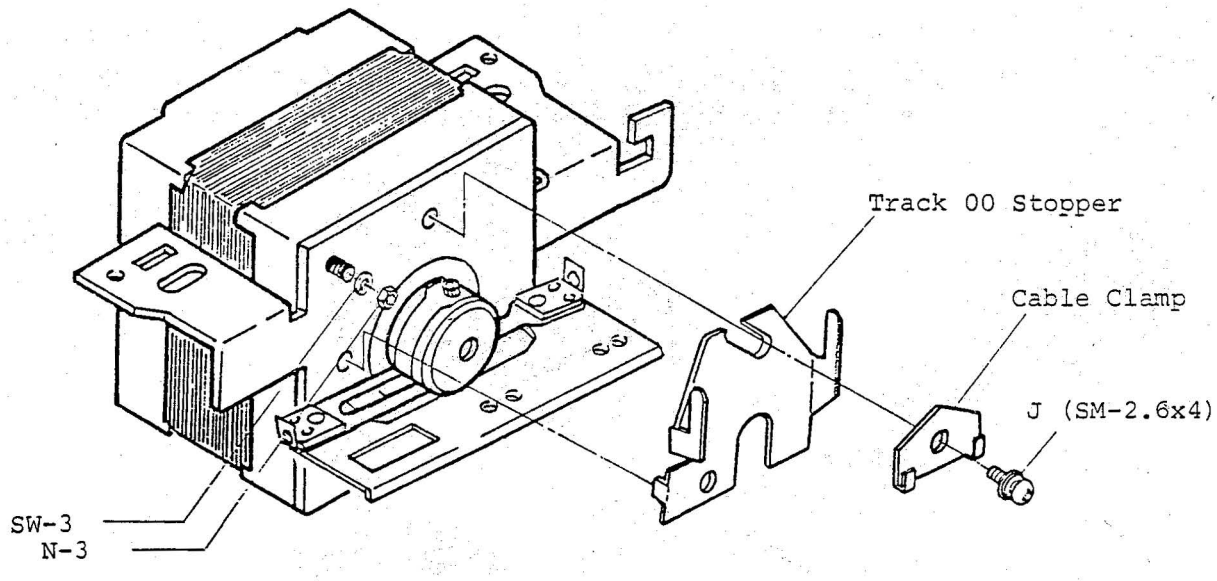

4. MAINTENANCE

4.1 PROCEDURE FOR CLEANING THE READ/WRITE HEAD

In the FB-501, 502, 503 and 504, only the floppy disk head cannot be replaced. Because it is completely bonded to the carrier. The head should be cleaned when dust and dirt particles are found. Note that any other cleaning method than the one described below may cause scratches on the head.

1. Slightly damp a cotton swab with isopropyl alchohol.
2. Part the load arm from the head without touching the load button.
3. Softly wipe the head with the dampened part of the cotton swab.
4. After the alchohol has fully evaporated, softly polish the head with a clean cotton swab.
5. Place the load arm on the head. At this time, extream caution should be exercised to avoid shocks to the head.

4.2 Caution on Handling Disks

- Avoid directly touching the mylar.
- Avoid storing disks in locations with high temperature or high humidity.
- Always ensure that the disk is inserted properly.

CHAPTER 2 ELECTRICAL SECTION

(FB-500 SERIES)

CHAPTER 2 ELECTRICAL SECTION

REVISED	DATE	PAGE	REMARKS
E0-2129-C	1/84	CONTENTS	REQUIRE REVISIONS
		2- 4	"
		2- 5	"
		2-21	"
E0-2129-D	2/84	TITLE PAGE	"
E0-2129-E	4/84	2- 5	"
		2-18	"
		2-22	"

CONTENTS

1. GENERAL DESCRIPTION 2- 1

2. BLOCK DIAGRAM 2- 2

3. ELECTRICAL DIAGRAM 2- 3

4. INDEPENDENT LSI AND READ LSI CONFIGURATION AND PIN NAMES 2- 4

4.1 Independent LSI Configuration and Pin Names 2- 4

4.2 Read LSI Configuration and Pin Names 2- 7

5. INPUT SIGNAL LINES (CPU to FDD) 2- 8

5.1 Drive Select Circuit and Indicator LED on Circuit 2- 8

5.2 Side Select Circuit 2-10

5.3 Head Positioning Circuit 2-11

5.4 WRITE GATE Signal 2-13

5.5 WRITE DATA Signal 2-13

5.6 Write Circuit and Erase Circuit 2-14

5.7 MOTOR ON Signal 2-18

6. OUTPUT SIGNAL LINES (FDD to CPU) 2-19

6.1 Index Circuit 2-19

6.2 Track 00 Detection Circuit 2-20

6.3 Write Protect Circuit 2-22

6.4 Read amplifier Circuit 2-23

7. OPTION 2-24

7.1 Head Load Circuit and Ready Signal Output Circuit 2-24

1. GENERAL DESCRIPTION

This circuit uses two independent LSIs: the LSI that controls the signals from the pulse motor, DD motor, and the sensors and the LSI for the read circuit, thus realizing an increase in packaging density, compaction of the unit, power-saving and improvement of the reliability.

2. BLOCK DIAGRAM

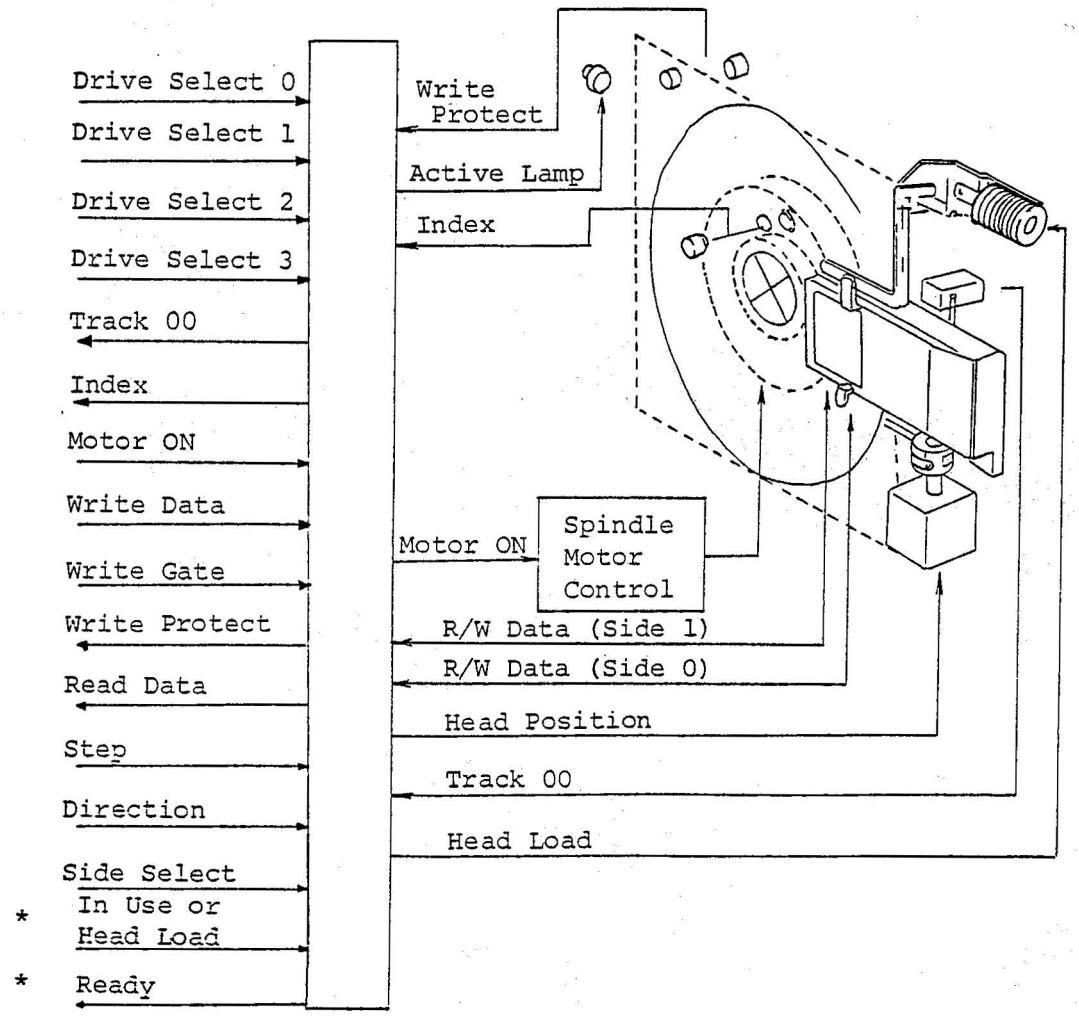

* Option

3. ELECTRICAL DIAGRAM

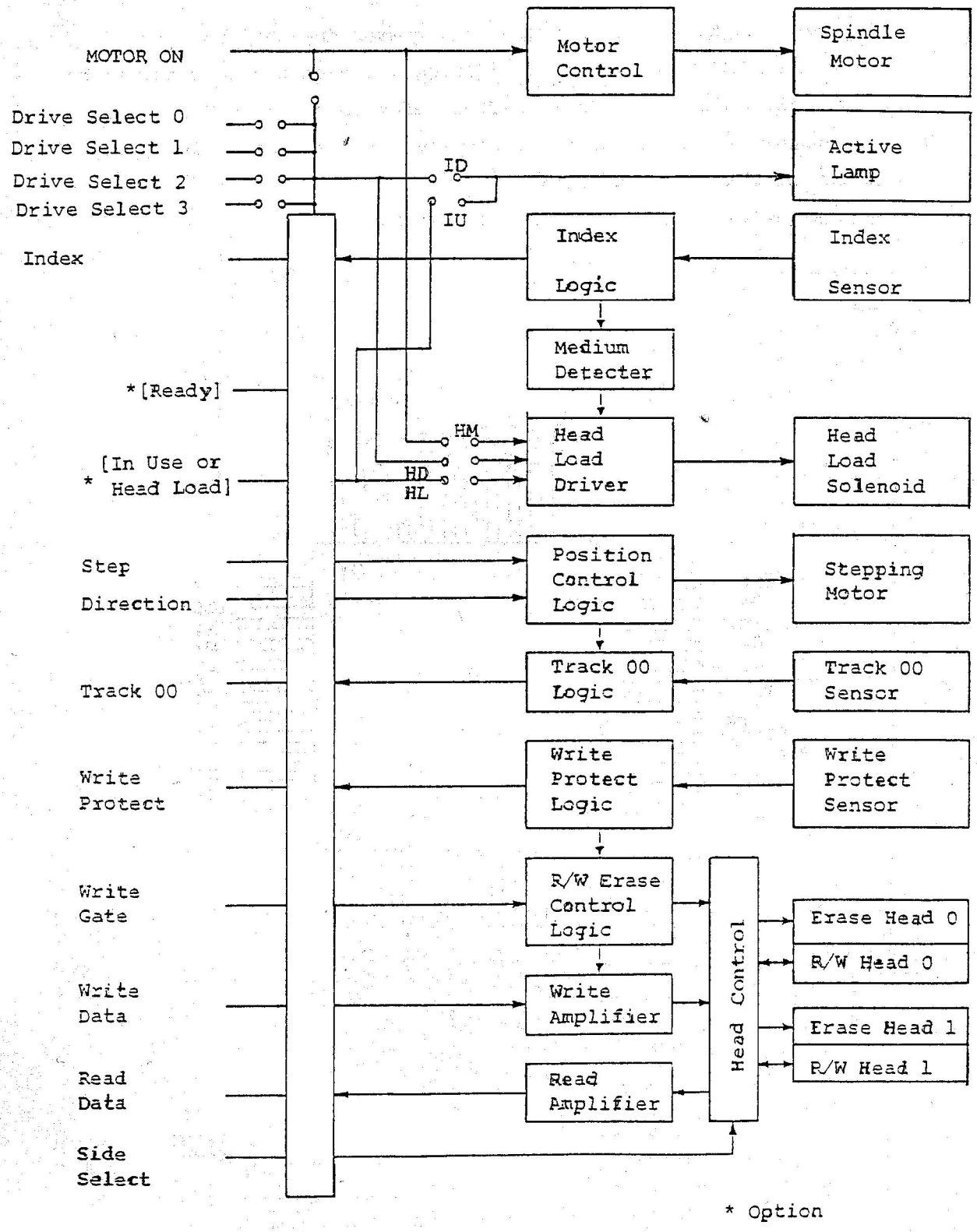

* Option

4. INDEPENDENT LSI AND READ LSI CONFIGURATION AND PIN NAMES

4.1 Independent LSI Configuration and Pin Names

Provided with the same functions as a custom one-chip LSI, this independent LSI is designed considering the hard timing required by the flexible disk drive (hereinafter referred to as "FDD").
The package is made compact and operated from a single +5V supply.
All the pins are TTL-compatible.
This LSI mainly controls the logic system.

Pin Configuration

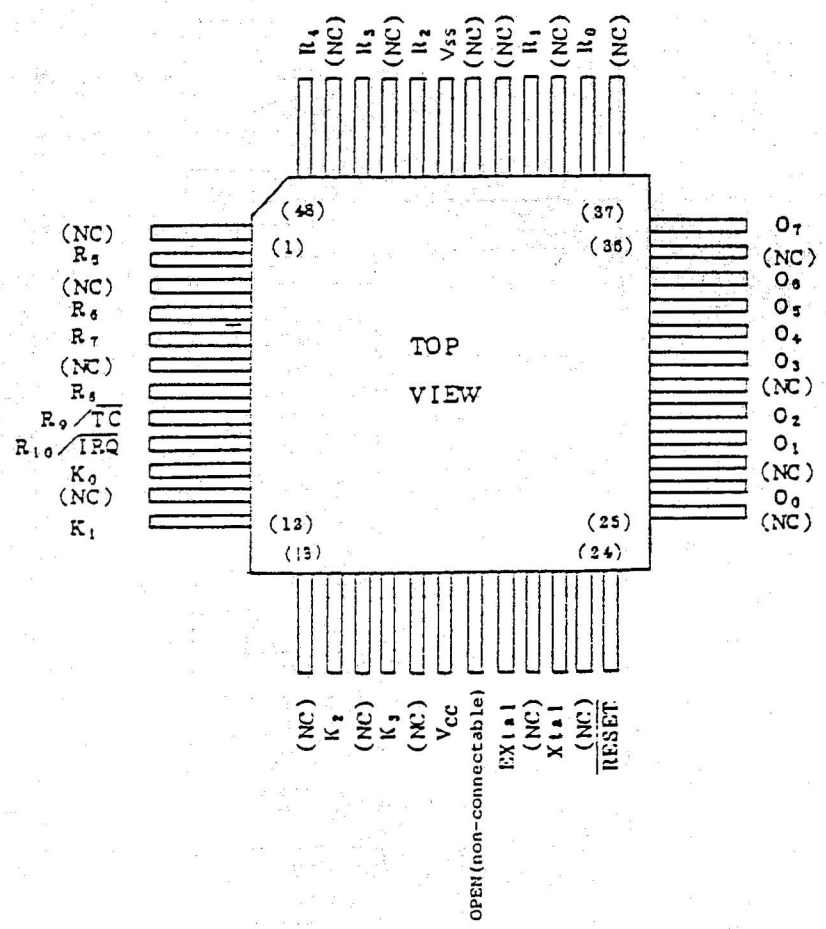

BLOCK DIAGRAM(EC-877)

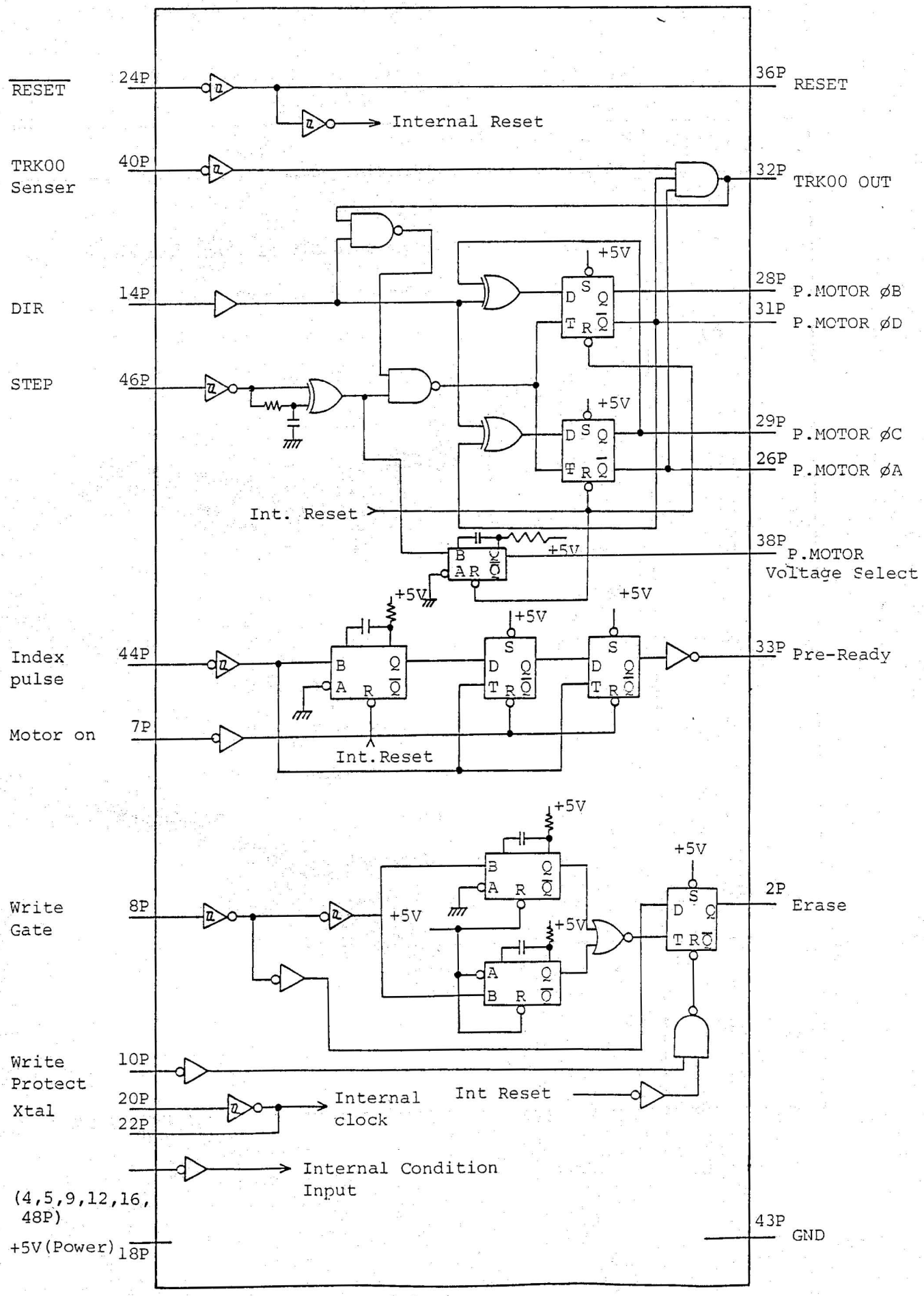

Pin Names

Pin Number	Pin Name	Pin Function
2	R5	Erase Gate
5	R7	Write Gate Signal Start and End Judgement
7	R8	External Motor Rotation
8	R9	Write Gate
9	R10	Write Gate Edge
10	K0	Write Protect
14	K2	Direction
16	K3	Side One Select
18	VCC	+5V
26	O0	Pulse Motor Phase A
28	O1	Pulse Motor Phase B
29	O2	Pulse Motor Phase C
31	O3	Pulse Motor Phase D
32	O4	Track 00 External Output
33	O5	Ready
36	O7	Soft Reset
38	R0	Pulse Motor Voltage Select
40	R1	Track 00 Position
43	VSS	GND
44	R2	Index
46	R3	Step

4.2 Read LSI Configuration and Pin Names

This LSI is a monolithic read amplifier that outputs signals recorded on the floppy disk in the form of digital signals. The LSI amplifies signals from the magnetic head and passes them through the filter. Then, it passes them through the differentiator, zero volt comparator and waveform shaper to obtain pulse outputs.

Features

Floppy Disk read processing is performed by one IC.

The outputs can be directly connected a TTL device.

Pin Configuration

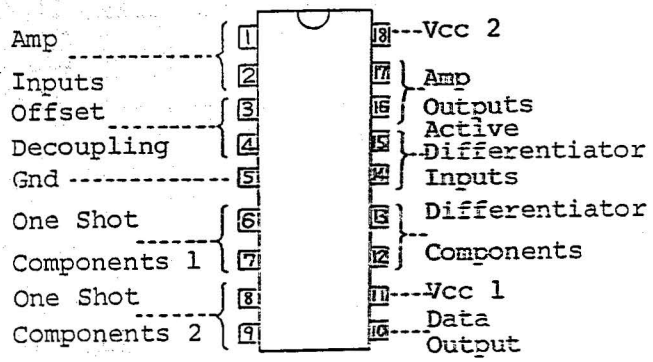

Block Diagram

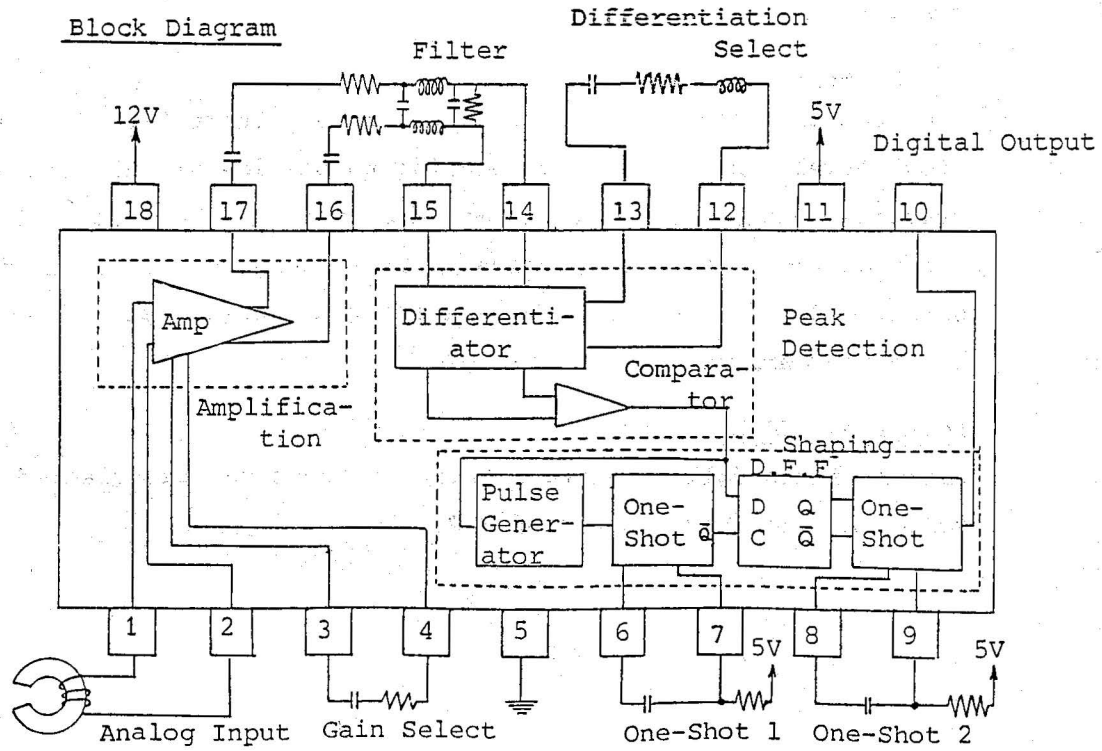

5. INPUT SIGNAL LINES (CPU TO FDD)

5.1 Drive Select Circuit and Indicator LED on Circuit

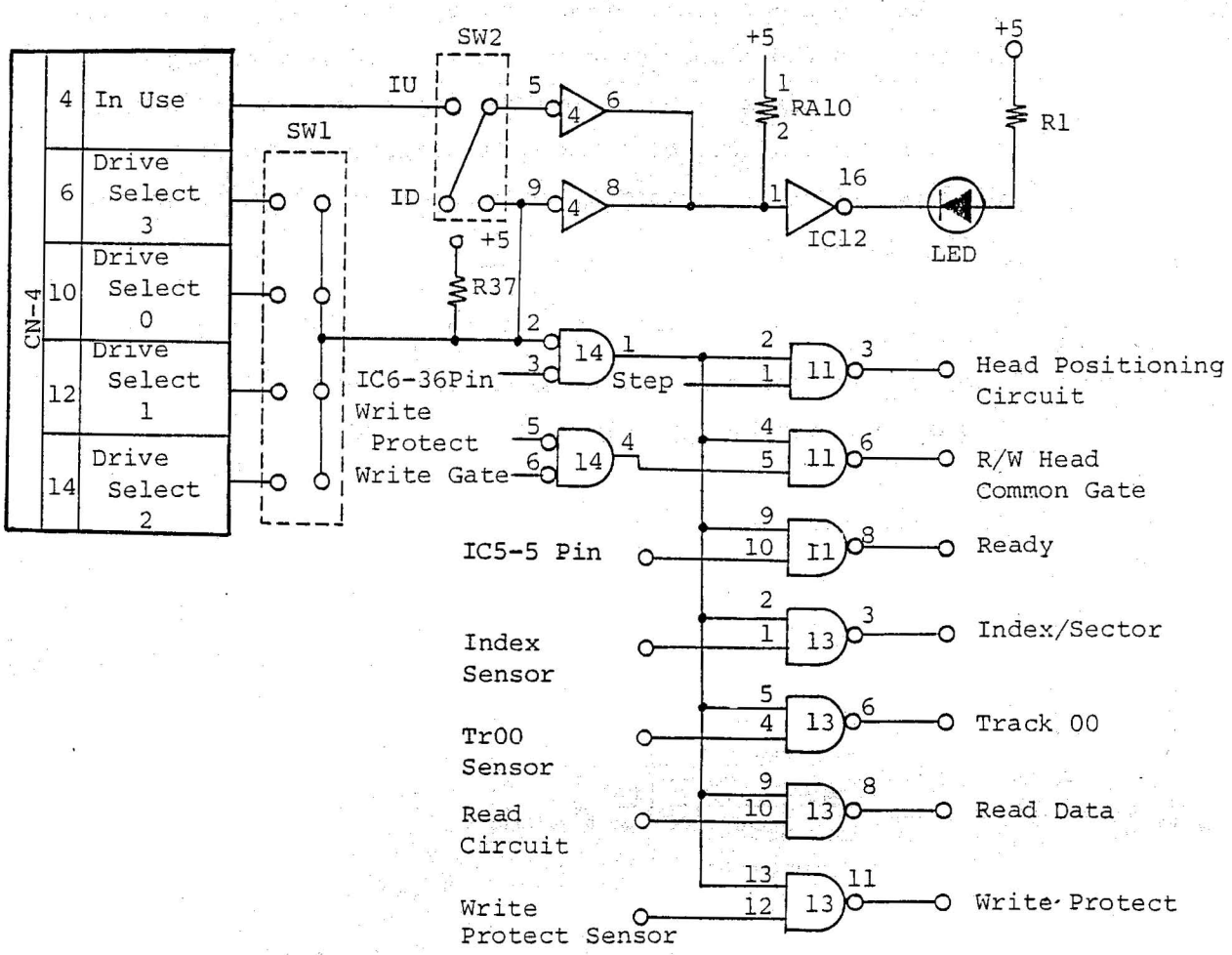

The drive select circuit and indicator LED on circuit are configured as shown above.

Drive Select Circuit

When one of these four signal lines Drive Selects 0 to 3 is at "Low" level, the drive corresponding to the low signal line responds to other input lines and the gates of the output signal lines of the drive open. Which of Drive Selects 0 to 3 the drive corresponds to is selected by inserting a shorting pin of SW1. Up to four drives are controllable.

Indicator LED on Circuit

Either of the following two lighting methods can be selected by switching the shorting pin of SW2.

(1) By connecting the shorting pin of SW2 to "IU", the LED is lit by the DRIVE SELECT signal and IN USE signal.

(2) By connecting the shorting pin of SW2 to "ID", the LED is lit by the DRIVE SELECT signal only.

5.2 Side Select Circuit

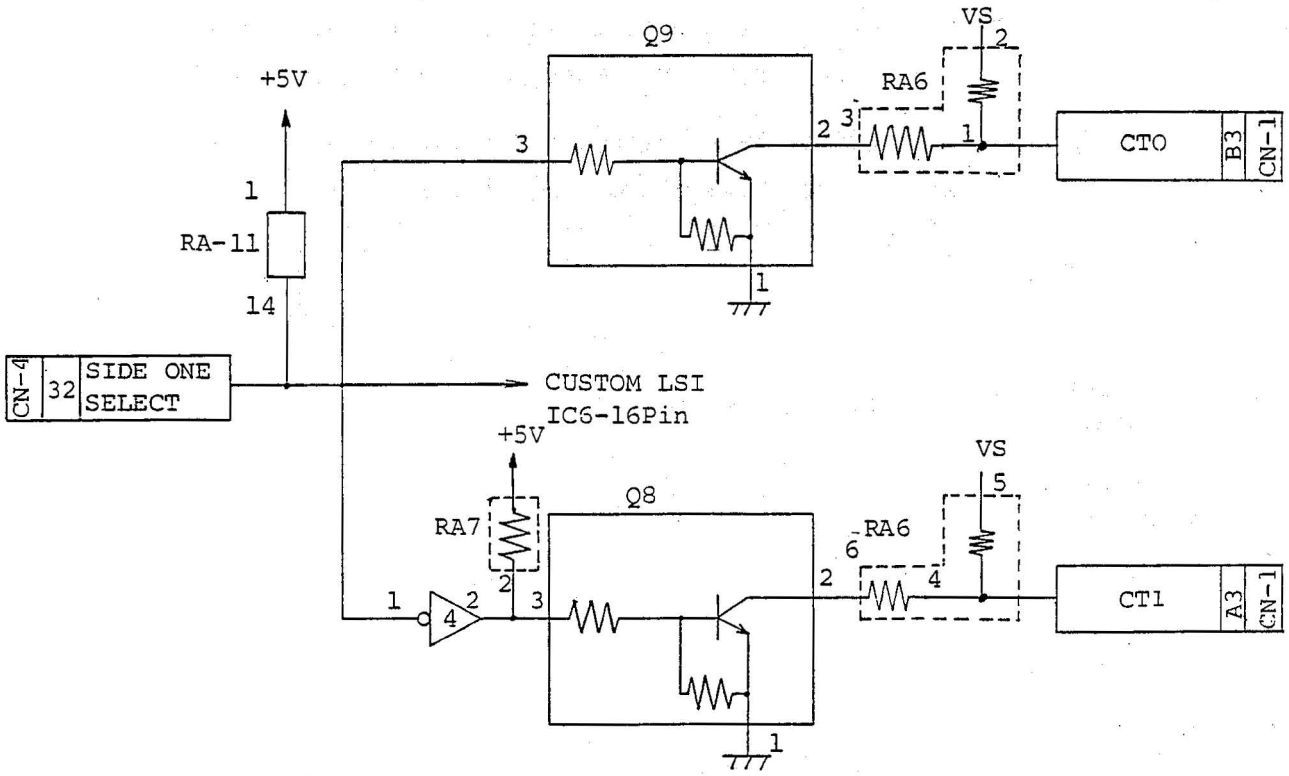

This circuit is used to select either side 0 or side 1 head. (In the case of the single side head, side 0 is automatically selected.)

A low on this input signal line causes side 1 head to be selected and a high on this line causes side 0 head to be selected. Waiting time is required between the instance at which the selection is completed upon the change of the SIDE SELECT signal and the instance at which write/read is enabled. However, this signal must not be changed until the erasing is completed after the completion of writing because of the tunnel erase system employed. For the tunnel erase system, refer to (2) in section 5.6 Erase Circuit.

5.3 Head Positioning Circuit

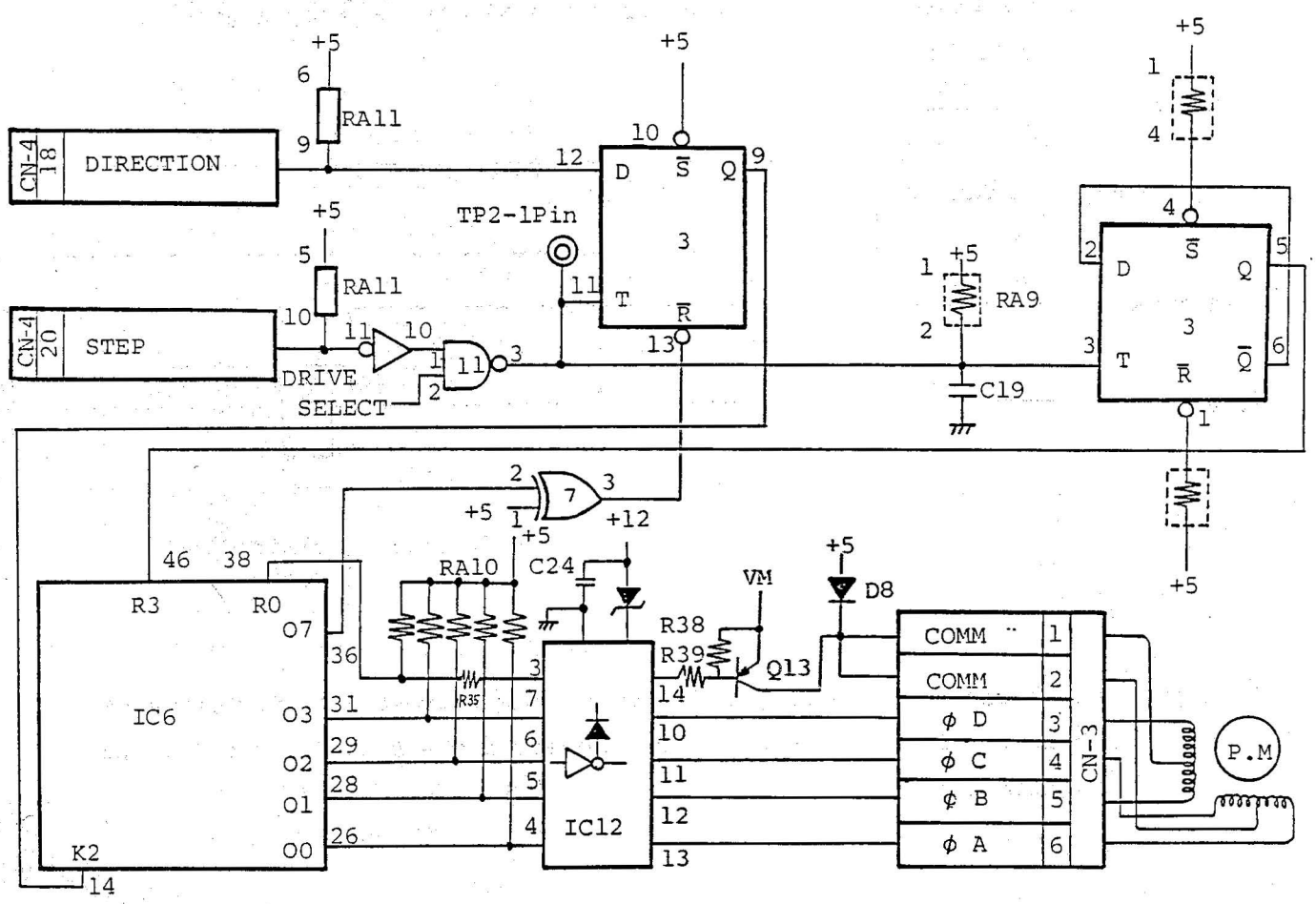

The head positioning circuit is configured as shown above. This circuit is used to move the head using step pulses, after the head stepping direction (inner or outer direction) is determined by the Direction signal. When the Direction signal from the host computer goes low and a step pulse signal is inputted, the head steps one track in the inner direction. When the Direction signal goes high, the head steps in the outer direction.

R38, R39 and Q13 in the circuit are used to drop the power when the stepping motor is on standby. To drive the stepping motor, Q13 is turned on by turning pin 38 of IC6 to "High" level and a voltage of 12V is applied to the stepping motor. To leave the motor on standby, Q13 is turned off and about 5V is applied to the stepping motor through D8 to hold the motor.

The timing chart for the Direction signal and Step signal is shown below.

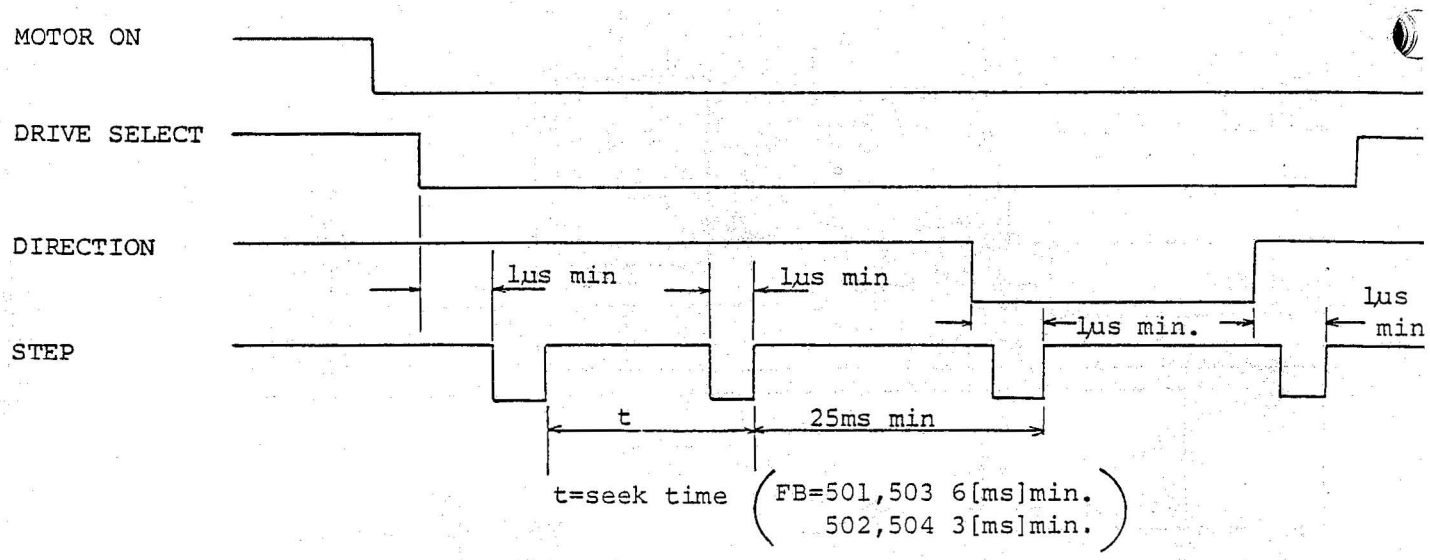

Inwriting or reading data, it is necessary to wait for at least a period of seek + settling time after the final step signal to stabilize the head.

5.4 WRITE GATE Signal

When the WRITE GATE input signal line of this circuit is low, the write circuit is made operable. However, writing will not occur, When the WRITE PROTECT output signal line is low (in a write desable state) or the corresponding FDD is not selected by the DRIVE SELECT signal line. When this input signal line is high, the FDD is in the read mode.

5.5 WRITE DATA Signal

This input signal line is used to transfer data to be written on the disk.

When the FM- or MFM-modulated signal turns from "High" to "Low" level, reverse current flows through the head to generate magnetic flux changes in it to write data on the disk. This input signal line is valid only when the WRITE GATE and DRIVE SELECT input signal lines are low and the WRITE PROTECT output signal line is high.

5.6 Write Circuit and Erase Circuit

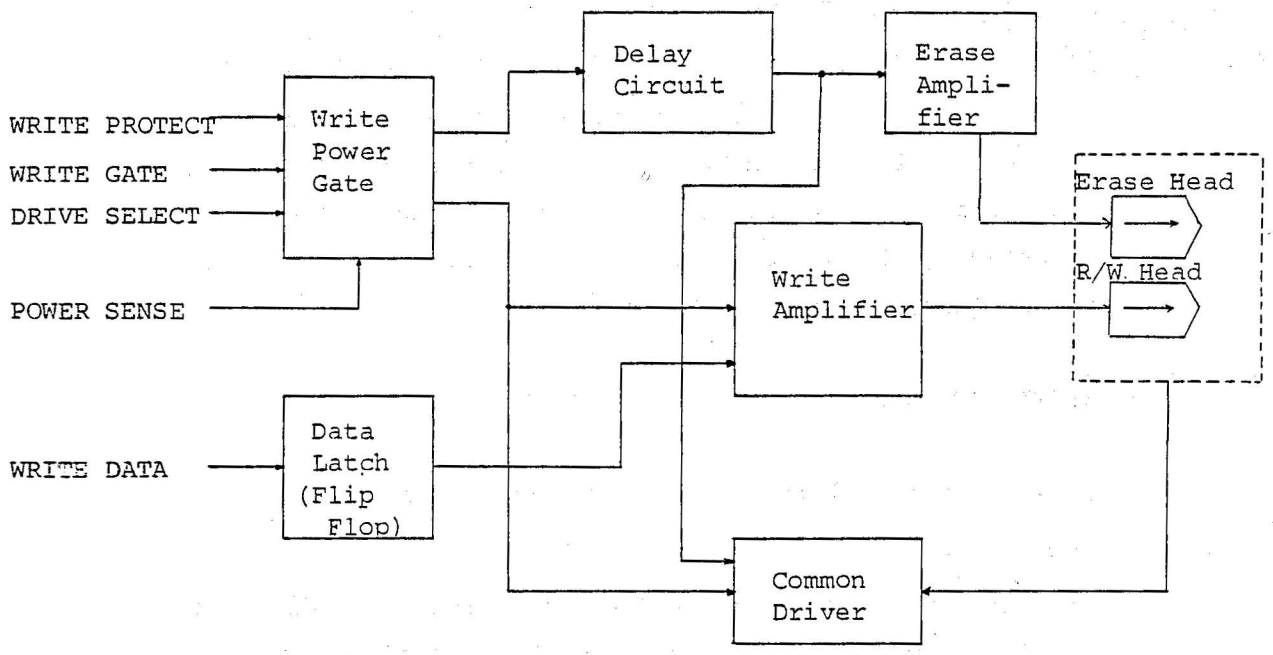

(1) Write Circuit

The block diagram for the write circuit and erase circuit is shown above.

The write data modulated in the FM or MFM system is divided by the data latch (flip flop) to become a WRITE DATA pulse. The write amplifier output signal becomes a rectangular signal that is inverted by this WRITE DATA pulse. In other words, the write amplifier inverts the polarity of the head current through this signal to cause the magnetic flux synchronized with the WRITE DATA pulse to be generated in the gap of the read/write head and the media is saturation-magnetized and recorded.

The write power gate opens only when the WRITE PROTECT output signal line is high and the WRITE GATE and DRIVE SELECT input signal lines are low, enabling writing and erasing.

The timing chart for the write circuit is shown below.

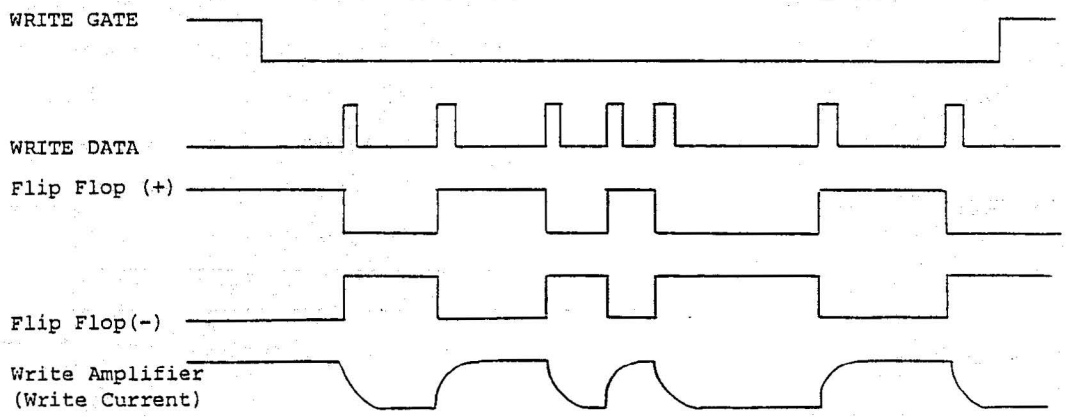

(2) Erase Circuit

The timing chart for the erase circuit is shown below.

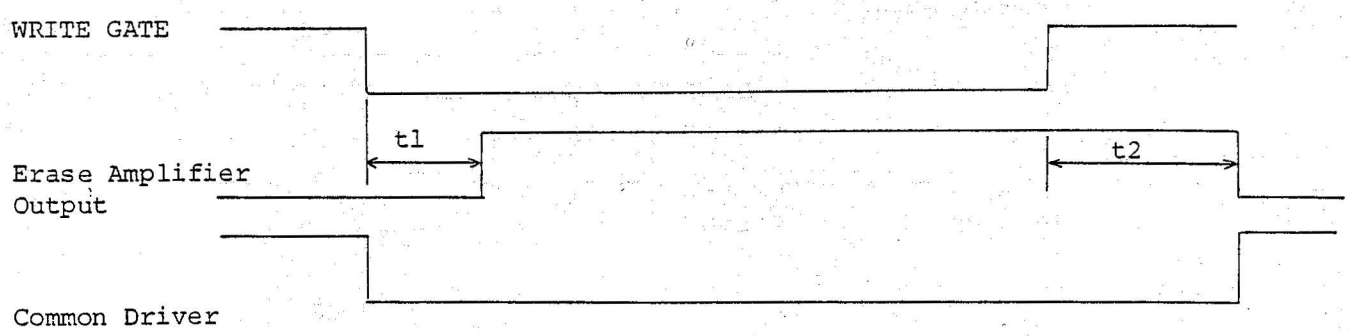

The tunnel erase system is adopted for this FDD. It consists of a broad-width read/write head followed by a tunnel earse head designed to allow the inner dimension to have the recording information track width. The information once recorded through the read/write head is trimmed at both edges by the tunnel erase head to be shaped to the desired track width. By doing this, even if track divergence occurs, it will not interfere with the adjacent track because the signals for the information track width are efficiently secured by the broad-width read/write head, thus securing the S/N ratio and improving the track density.

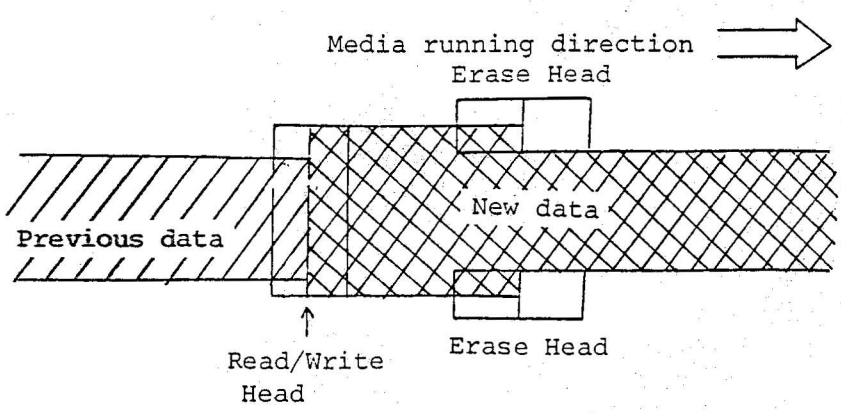

For this reason, the erase amplifier output signal rises t1 milliseconds (minimum time required for the location written on the disk by the read/write head to reach the erase head) after the WRITE gate signal turns from "High" to "Low" level, causing current to flow through the erase head to perform DC erasing. Then, the erase amplifier output signal falls t2 seconds (maximum value of time difference of above t1) after the completion of writing on the media (when the WRITE GATE signal rises), thereby completing the DC erasing.

T1 and T2 seconds are previously-determined by the delay circuit.

5.7 MOTOR ON SIGNAL

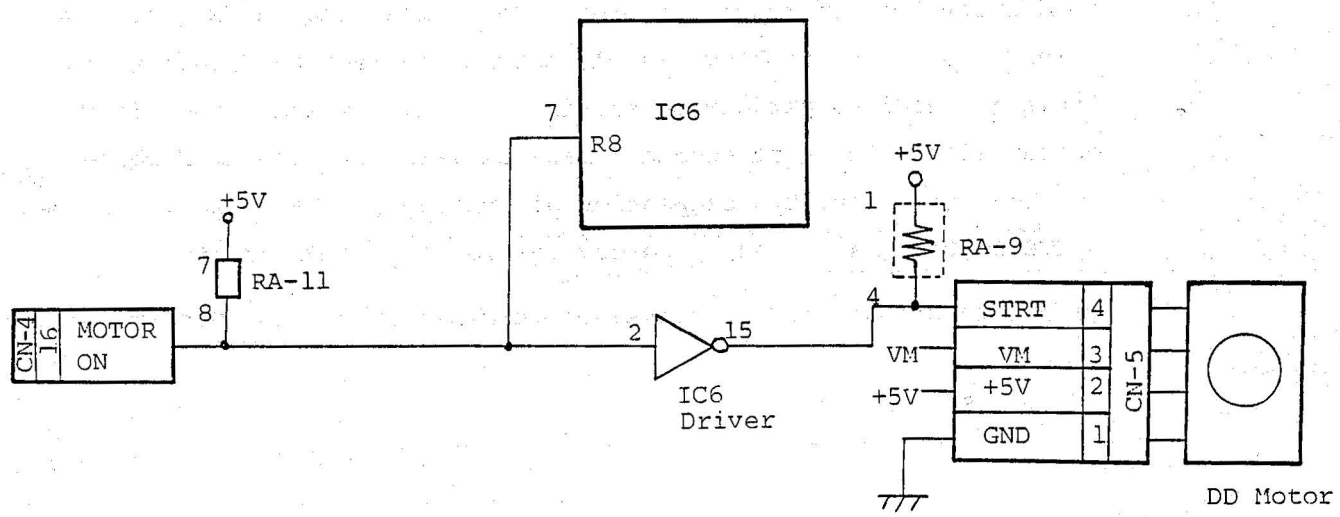

A spindle motor drive signal appears on this input signal line.
When the input signal is low, the spindle motor turns.
Conversely, when the signal is high, the motor stops.
This signal line responds regardless of the DRIVE SELECT signal.
The start-up time for the spindle motor requires 0.5 seconds.

6. OUTPUT SIGNAL LINES (FDD to CPU)

6.1 Index Circuit

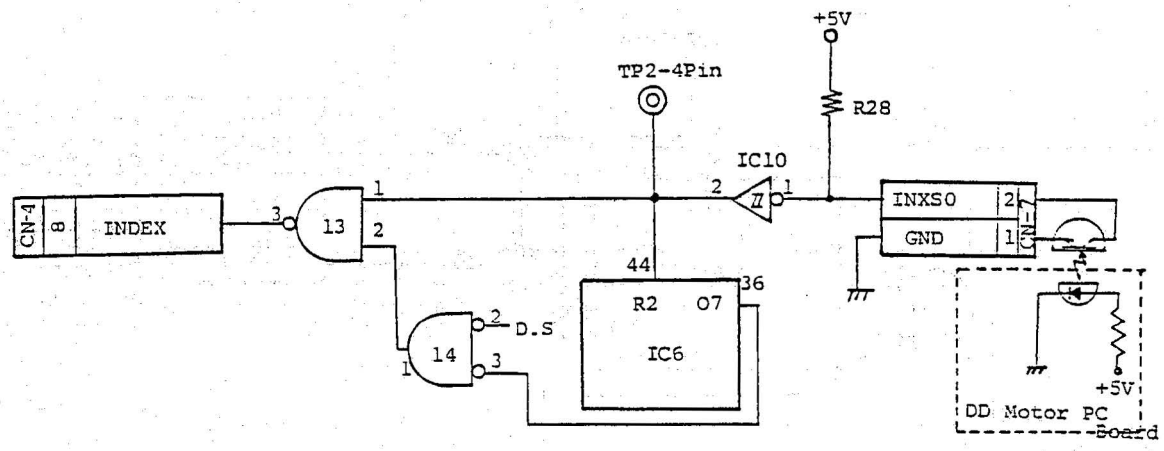

The index circuit is configured as shown above.

When the index sensor detects the index hole in the disk, this output signal line goes low indicating the beginning of a track.

The waveform of TP2-4Pin, while the media is turning is shown below.

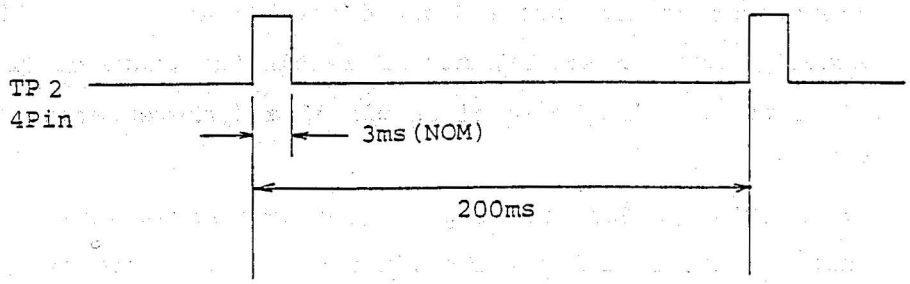

6.2 Track 00 Detection Circuit

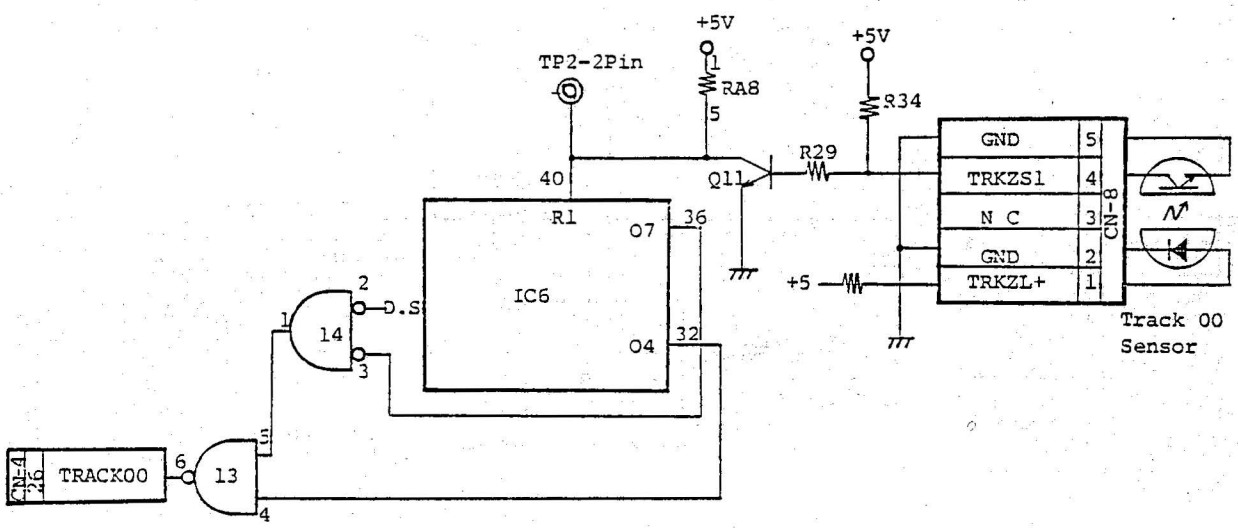

The track 00 detection circuit is configured as shown above.

This circuit detects track 00, the outermost track of the disk, through the track 00 sensor, and sends a Track 00 signal to the host computer.

With the stepping motor turning to move the head toward Track 00 (outer side of the disk), the light of the track 00 sensor LED is cut off when the head comes near Track 00, causing the photo-transistor to turn off and pin 40 of IC6 to go low. When the stepping motor reaches phase AD within the range of Track 00, IC6 outputs a "High" level on pin 32 and the external output pin goes low.

O7 of IC6 is a Soft Reset pin. The Soft Reset line goes low upon in initially resetting the IC6 after power is turned on.

The waveform on test pin TP2-2Pin is shown below.

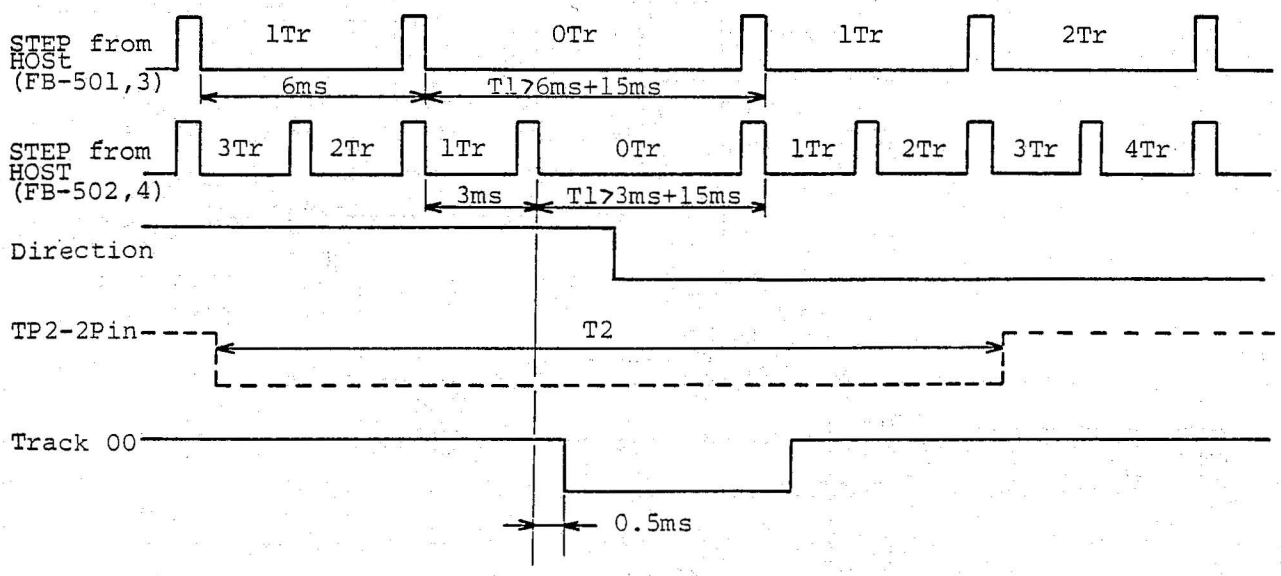

* For T2, see the section on track 00 adjustment.

6.3 Write Protect Circuit

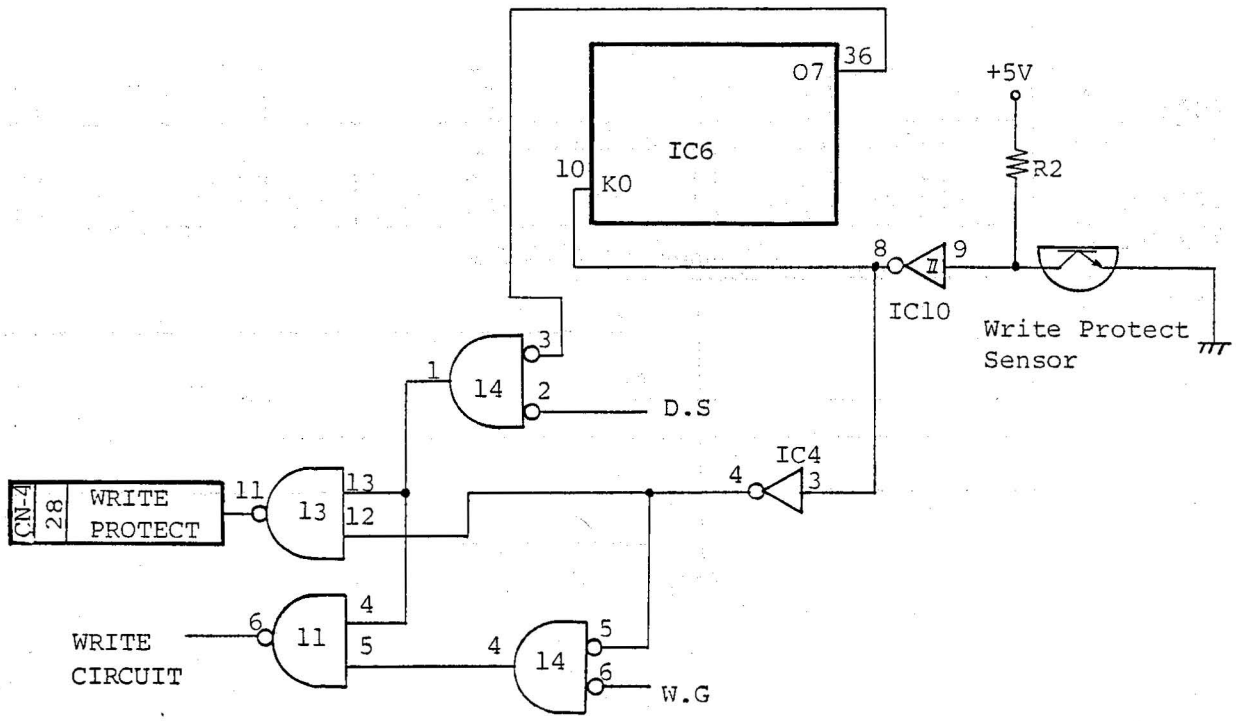

This circuit is provided to prevent erroneous erasing of protected data recorded on the disk.

The "Low" level signal is outputted when the write enable notch of the disk, inserted into the FDD, is covered with a label, thus disabling writing to the disk. Conversely, when the "High" level signal is outputted, the write enable state is assumed.

6.4 Read Amplifier Circuit

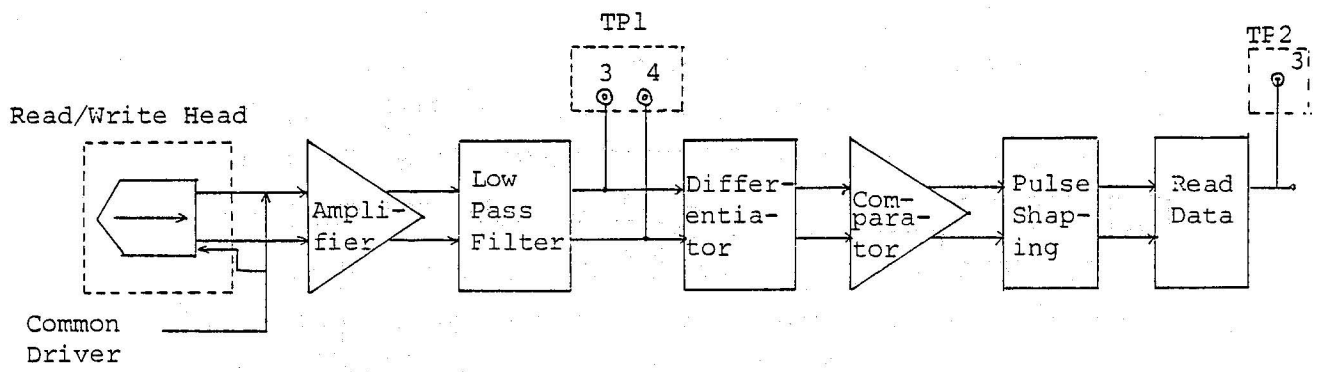

The block diagram for the read amplifier is shown above.

This circuit picks up data recorded on the media through the magnetic head, and outputs read data close to the recorded signals by amplifying, although it slightly deviates time-wise, identifying, and pulse-shaping the data.

The timing chart for the read amplifier circuit is shown below.

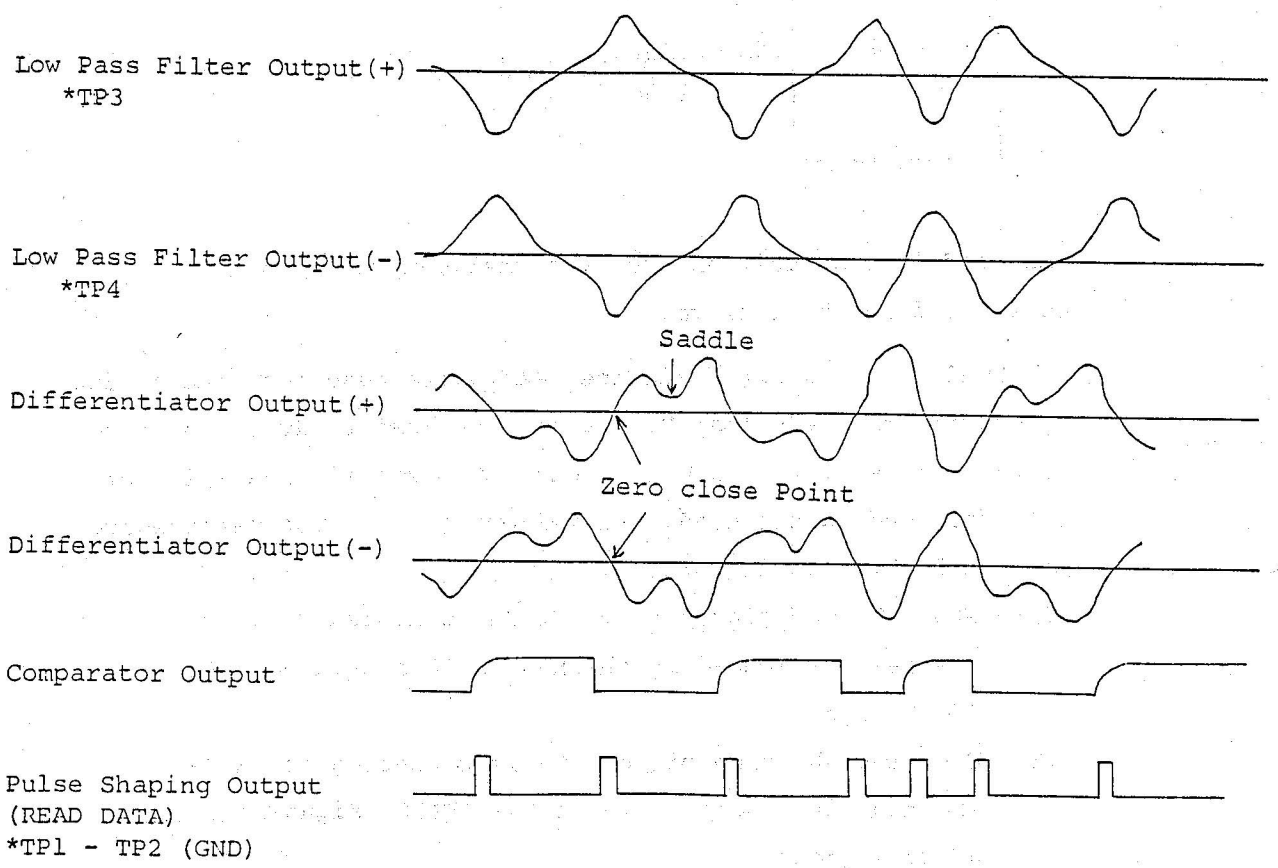

7. OPTION

7.1 Head Load Circuit and Ready Signal Output Circuit

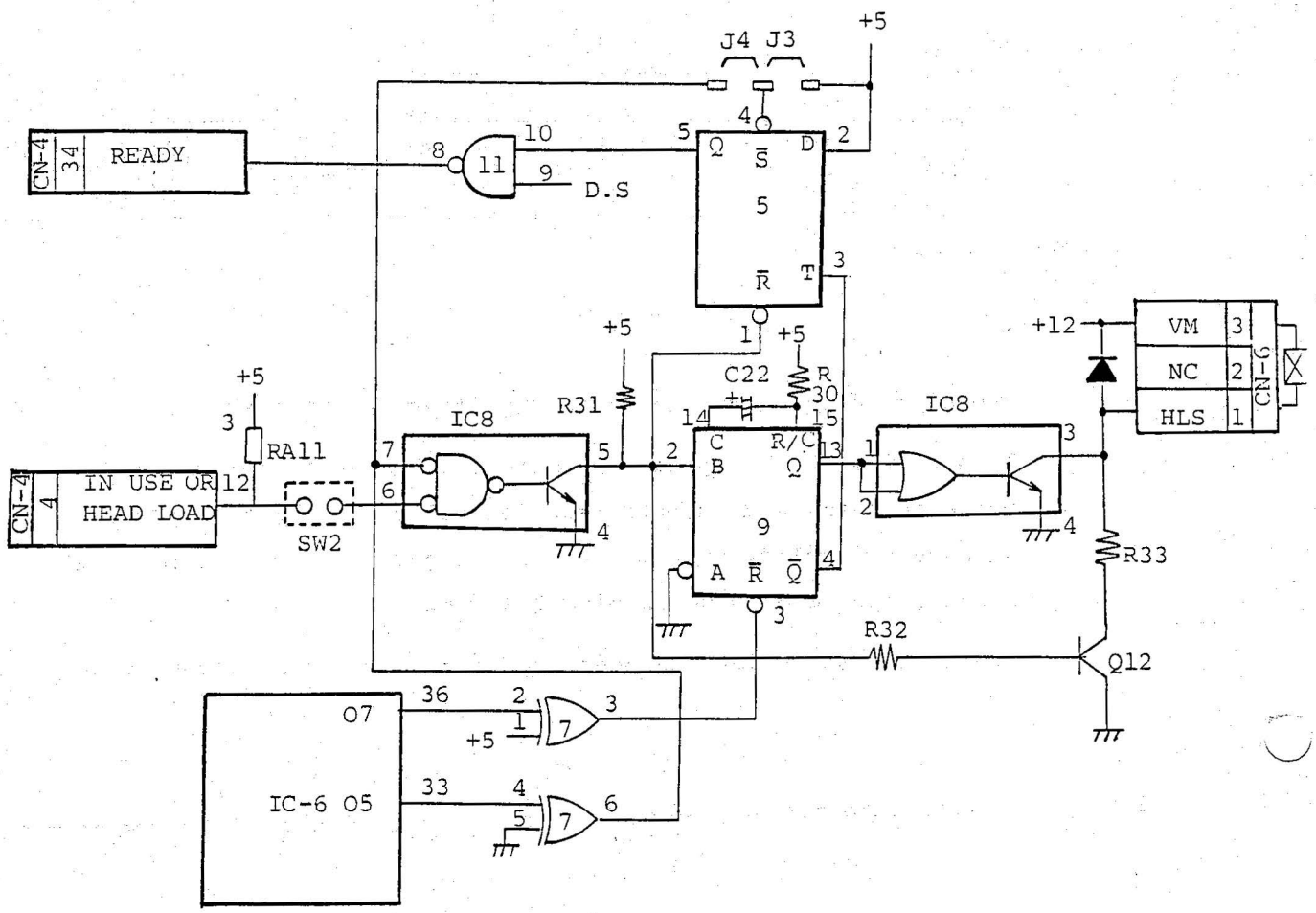

The head load circuit and ready signal output circuit are configured as shown above.

The head load circuit loads the read/write head onto the medium by driving the head load Mg, making the head ready to read or write. In using the IN USE or HEAD LOAD signal line (pin4 of CN4) for loading the head, the following three use methods are selectable by changing SW2.

(1) When the shorting pin of SW2 is connected to "HL": The head is loaded by the HEAD LOAD signal and PRE READY signal.

(2) When the shorting pin of SW2 is connected to "HD": The head is loaded by the DRIVE SELECT signal and PRE READY signal.

(3) When the shorting pin of SW2 is connected to "HM":
The head is loaded by the MOTOR ON signal and PRE READY signal.

The PRE READY signal checks two states, media insertion and rotation, by detecting three turns of the medium through the index detection circuit, and causes a "Low" level signal to be output from pin 33 of LSI6.

R33 and Q12 in the circuit are used to drop the power when the head load Mg is operating. Current flows between pins 3 and 4 of IC8 at attraction, and accross R33 and between the collector and emitter of Q12.

The READY signal can select either of the following two use methods by connecting jumper J3 or J4.

(1) When J4 is connected:
A READY signal is output by the PRE READY of LSI6.

(2) When J3 is connected:
After LSI6 outputs a PRE READY to make the head loaded, a READY signal is output.

CHAPTER 3 CIRCUIT DIAGRAM

(FB-500 SERIES)

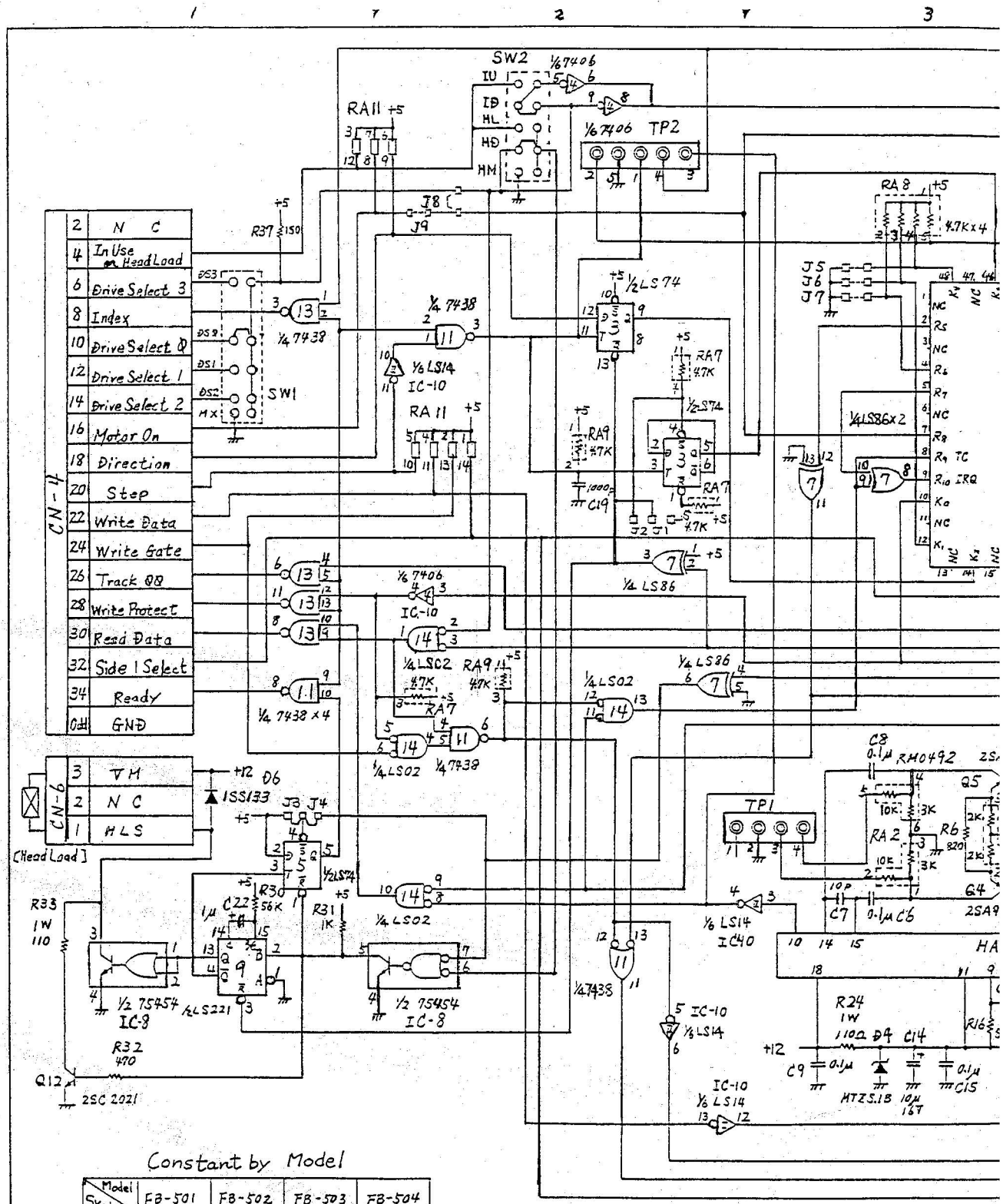

Constant by Model

Symbol \ Model	FB-501	FB-502	FB-503	FB-504
R21	47	100	47	100
R12	560	560	560	750
C10	100p	100p	100p	22p
R22	10K	10K	10K	5.6K
R19	—	—	10K	5.6K

NOTE: R101 and C101 in the frame GND circuit are omitted from the applicable PWB No. CFE61-05003.

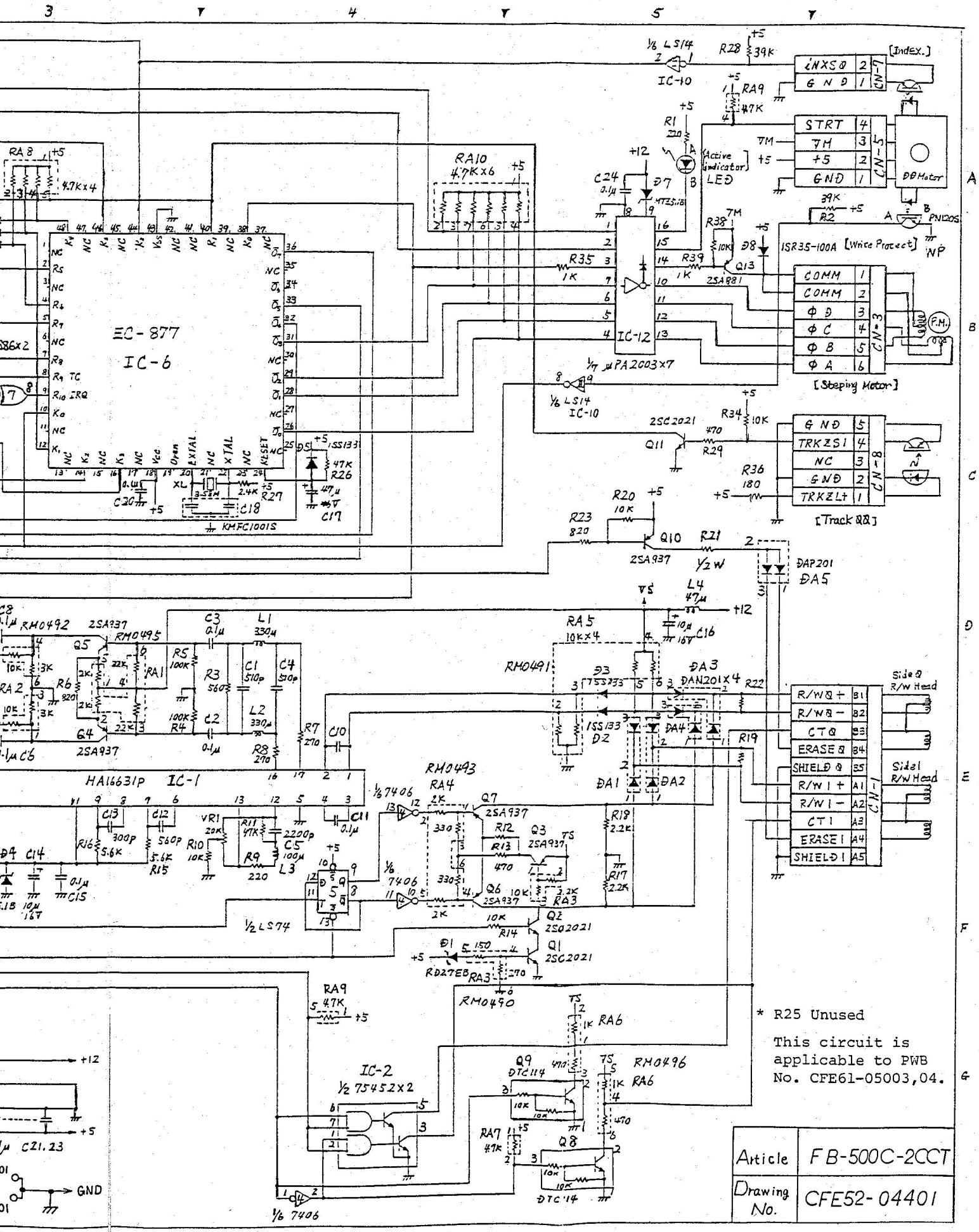
IC-6
IC-12
IC-10
IC-1
IC-2
CN-7
CN-1
CN-3
CN-8
[Index.]
[Steping Motor]
[Track QQ]
[Write Protect]
Active indicator
LED
DD Motor
F.M.
Side 0 R/W Head
Side 1 R/W Head
* R25 Unused
This circuit is applicable to PWB No. CFE61-05003,04.
Article FB-500C-2CCT
Drawing No. CFE52-04401

CHAPTER 4 TROUBLESHOOTING

(FB-500 SERIES)

CHAPTER 4 TROUBLESHOOTING

REVISED	DATE	PAGE	REMARKS
EO-2129-E	4/84	4- 5	REQUIRE REVISIONS
		4- 7	"
		4- 8	"

CONTENTS

1. SOFT ERROR PROCESSING 4- 1

2. FLOPPY DISK DRIVE FOR REPAIR 4- 3

3. TROUBLESHOOTING PROCEDURES 4- 5

3-1 MEDIA ROTATION CHECK 4- 7

3-2 TRACKING MECHANISM 4- 8

3-3 WRITE CIRCUIT CHECK 4-11

3-4 READ CIRCUIT 4-13

1. SOFT ERROR PROCESSING

1.1 General

The following soft errors are often mistakenly for errors caused by troubles or mis-adjustments of the disk drive.

- o Errors caused by improper operational procedure, incorrect programming or damaged disk.
- o Software error caused by dust in the air, random electric interference or other external cause.

Unless a defective assembly point or damage point is clearly found in visual inspection, check to see whether the error repeats with the current diskette and also whether the same error if caused with other diskette.

1.2 Detection and Correction and Read Error

Read errors are usually caused by the following conditions.

(1) Dust between the read/write head and disk; usually dirt resulting from dust is eliminated by the self-cleaning wiper in the diskette.

(2) Fine track divergence which is not detected during writing.

(3) Wear of damaged head load pad or wear of disk caused by side 0 or side 1 of double-side head.

(4) Improper grounding of the power supply of the disk drive in the host computer.

(5) Improper motor speed.

To correct soft errors as above (1) to (5), follow the steps below.

(1) Re-read the error-occurred track about 10 times.

(2) If the data is not restored in step 1, allow the head to move to track 00 and make sure that the head is at track 00.

(3) Move the head to the error-occurred track.

(4) Repeat step (1).

(5) Errors which cannot be corrected by repeating the above steps are unrecoverable errors.

1.3 Write Error

An error which has occurred during writing is detected during a subsequent reading of the data written.

(1) To eliminate the error, write and read again.

(2) If the error still occurs after the above procedure is repeated a few times, perform reading using another track to determine whether the disk or drive is malfunctioning.

(3) If the error persists, change the disk and perform the above procedure.
If the error still persists, the drive is defective.

1.4 Seek Error

Possible Cause.

(1) The pulse motor or pulse motor drive circuit is defective.

(2) The carriage is defective.

There are two procedures to correct seek errors.

(1) Readjust the belt tension. —— Refer to Chapter 2.

(2) Readjust track 00. ———— Refer to Chapter 2.

1.5 Interchange Error

Sometimes data written by a disk drive cannot be read by another drive. This phenomenon is called "interchange error".
The points to be checked are:

(1) Head alignment is defective ... Refer to Head/Radial Adjustment.

(2) Head output is not enough ... Refer to Head Output Adjustment.

(3) The motor speed is incorrect ... Refer to Motor Speed Adjustment.

(4) Check the center hole of the disk.
If the center hole of the disk is damaged, check the clamp mechanism.

2. FLOPPY DISK DRIVE FOR REPAIR

2.1 Have the user send you the defective floppy disk drive together with the diskette which was used when the user found it defective. Without this diskette, you may fail to locate the trouble.

2.2 Be sure to get information from the user about the operating conditions at the time the user found the floppy disk drive defective. This will help in troubleshooting later.

a) If the Active lamp will not light and the unit does not operate at all, check the DC Power Supply.

b) If the Active lamp lights but an operating sound is not heard inside the unit, proceed to section 3.1.

c) If stepper motor turns without causing carriage movement, proceed to section 3.2.

d) If the drive executes continuously but fails to read and write, proceed to sections 3.3 and 3.4.

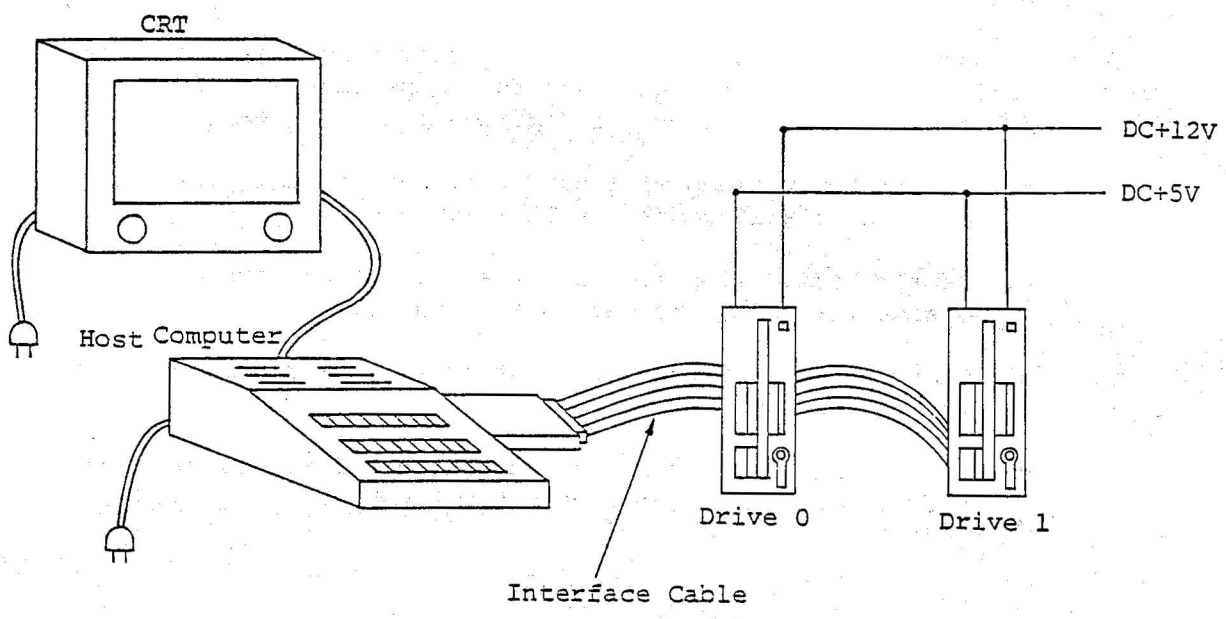

Sample Test Connection

Drive 0: Normal Drive

Drive 1: Sample Drive

3. TROUBLESHOOTING PROCEDURES

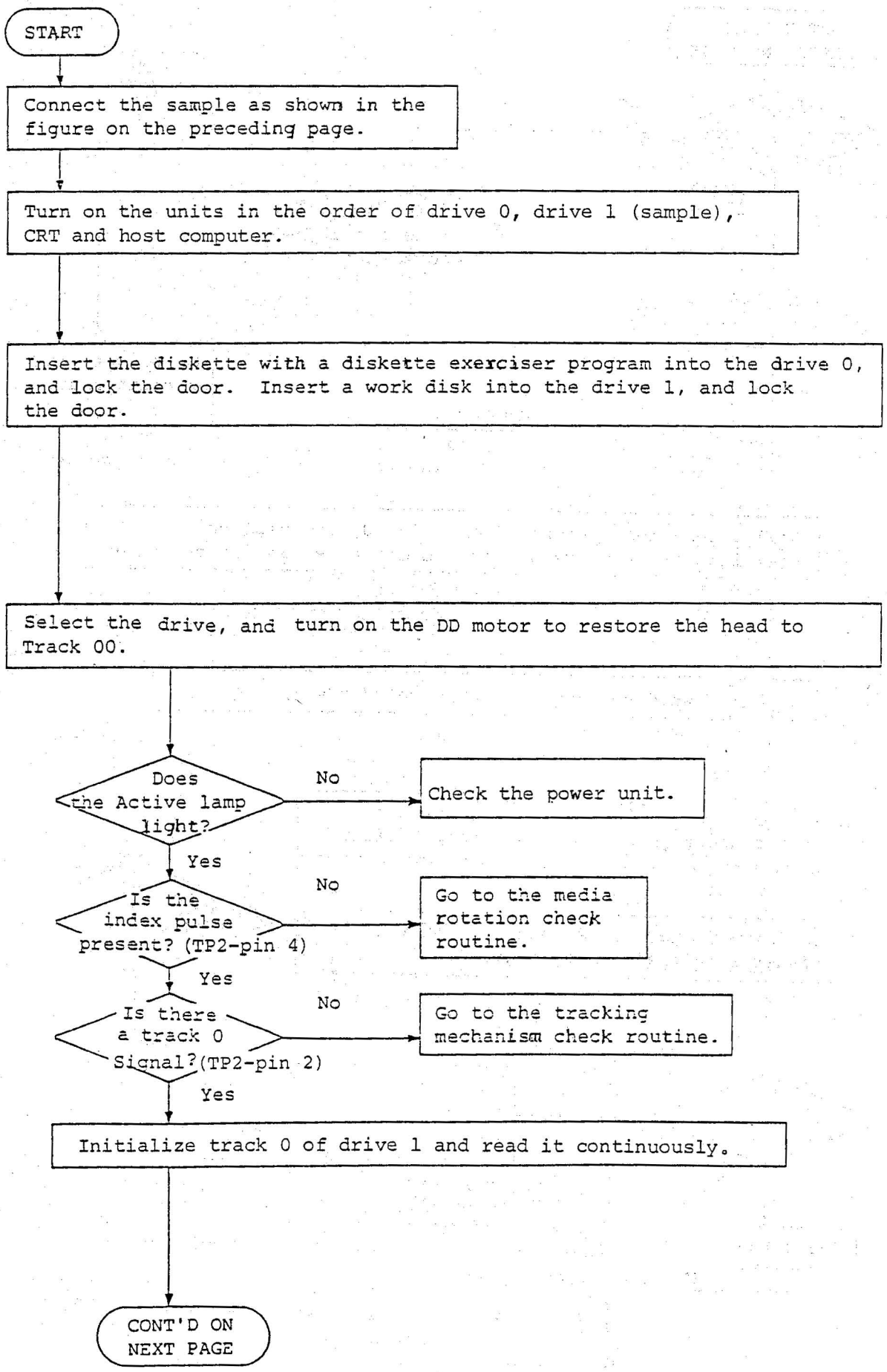

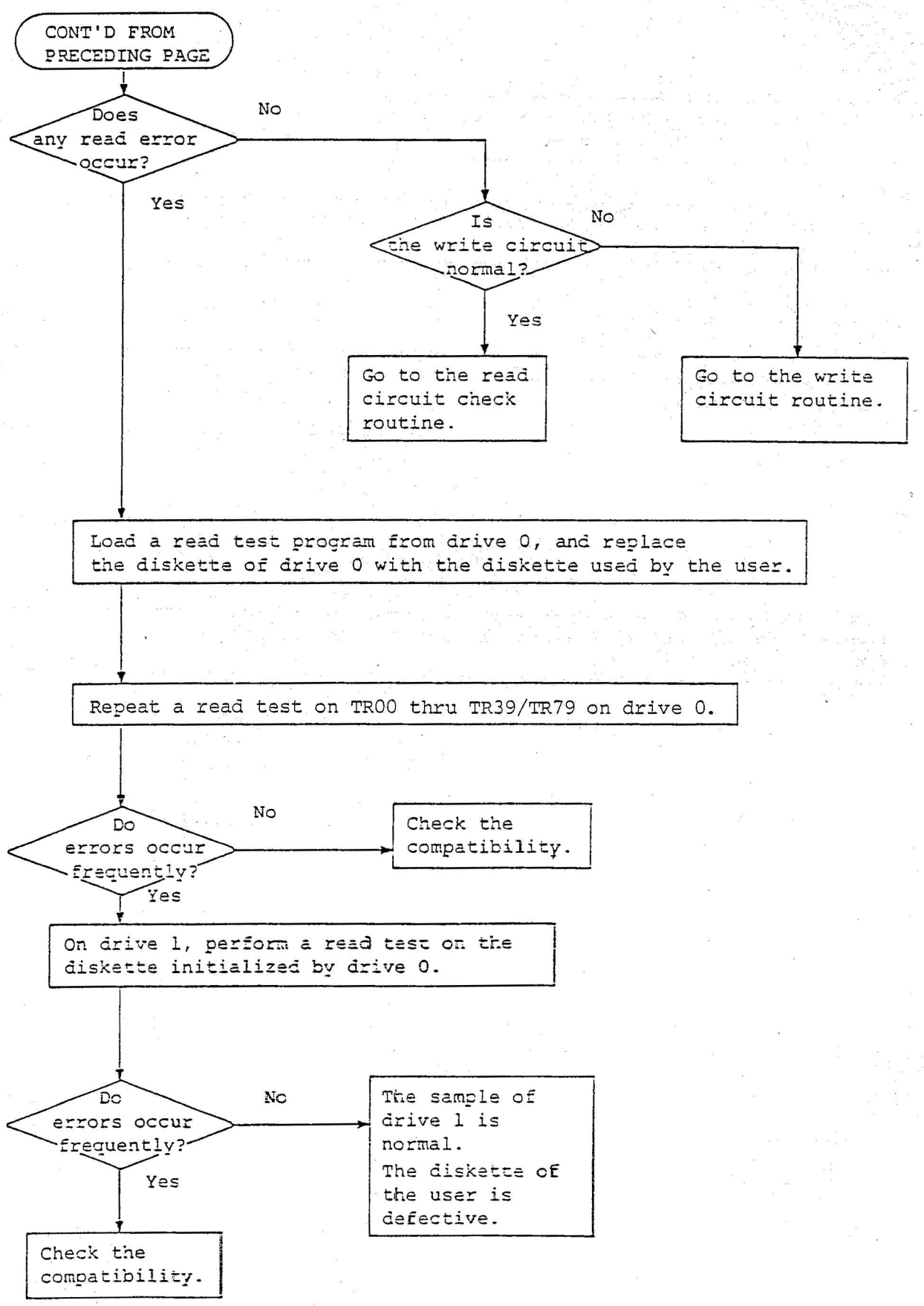
CONT'D FROM PRECEDING PAGE
Does any read error occur?
No
Yes
Is the write circuit normal?
No
Yes
Go to the read circuit check routine.
Go to the write circuit routine.
Load a read test program from drive 0, and replace the diskette of drive 0 with the diskette used by the user.
Repeat a read test on TR00 thru TR39/TR79 on drive 0.
Do errors occur frequently?
No
Check the compatibility.
Yes
On drive 1, perform a read test on the diskette initialized by drive 0.
Do errors occur frequently?
No
The sample of drive 1 is normal.
The diskette of the user is defective.
Yes
Check the compatibility.

3-1 MEDIA ROTATION CHECK

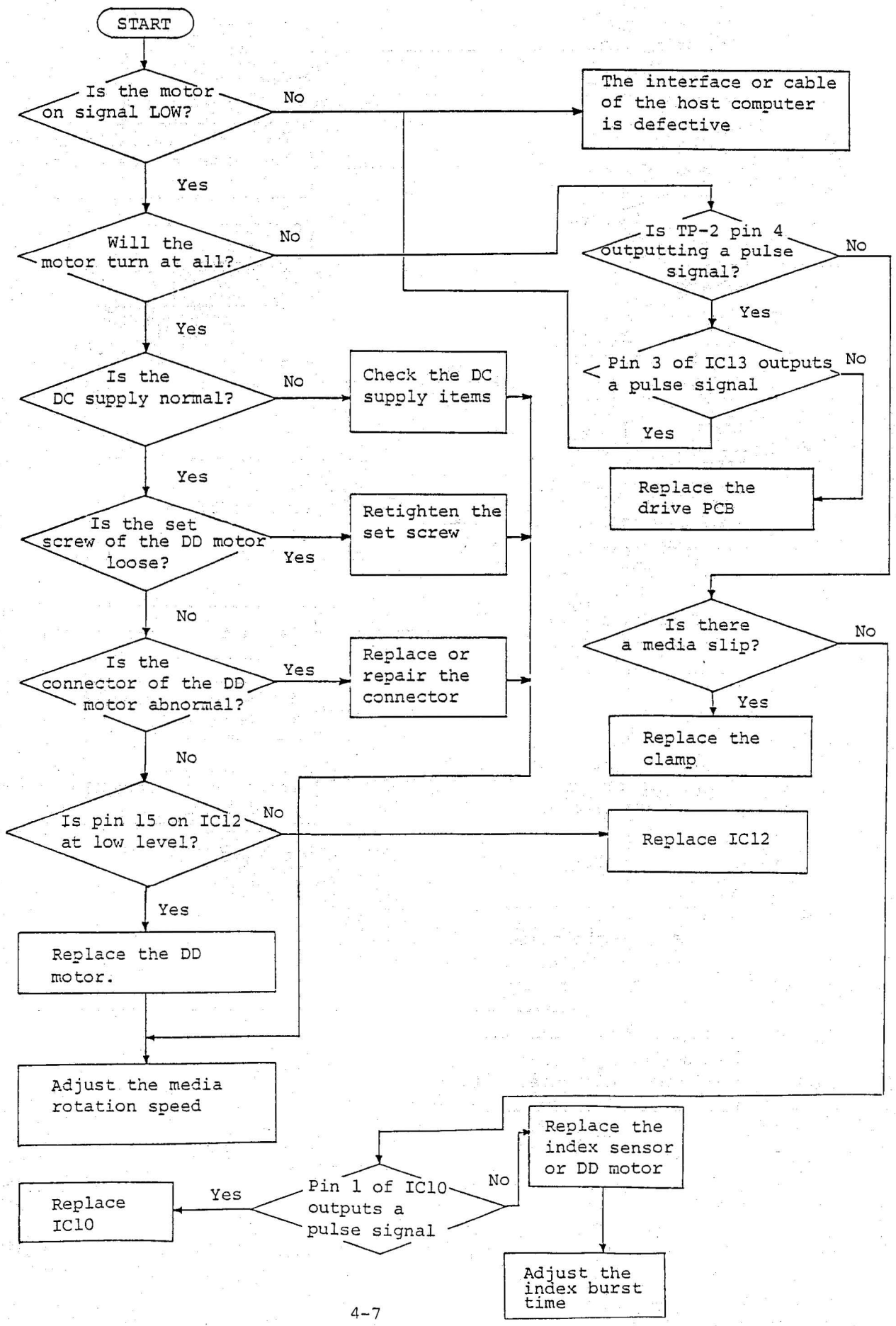

3-2 Tracking Mechamism (Track 0 Signal Won't Be Generated)

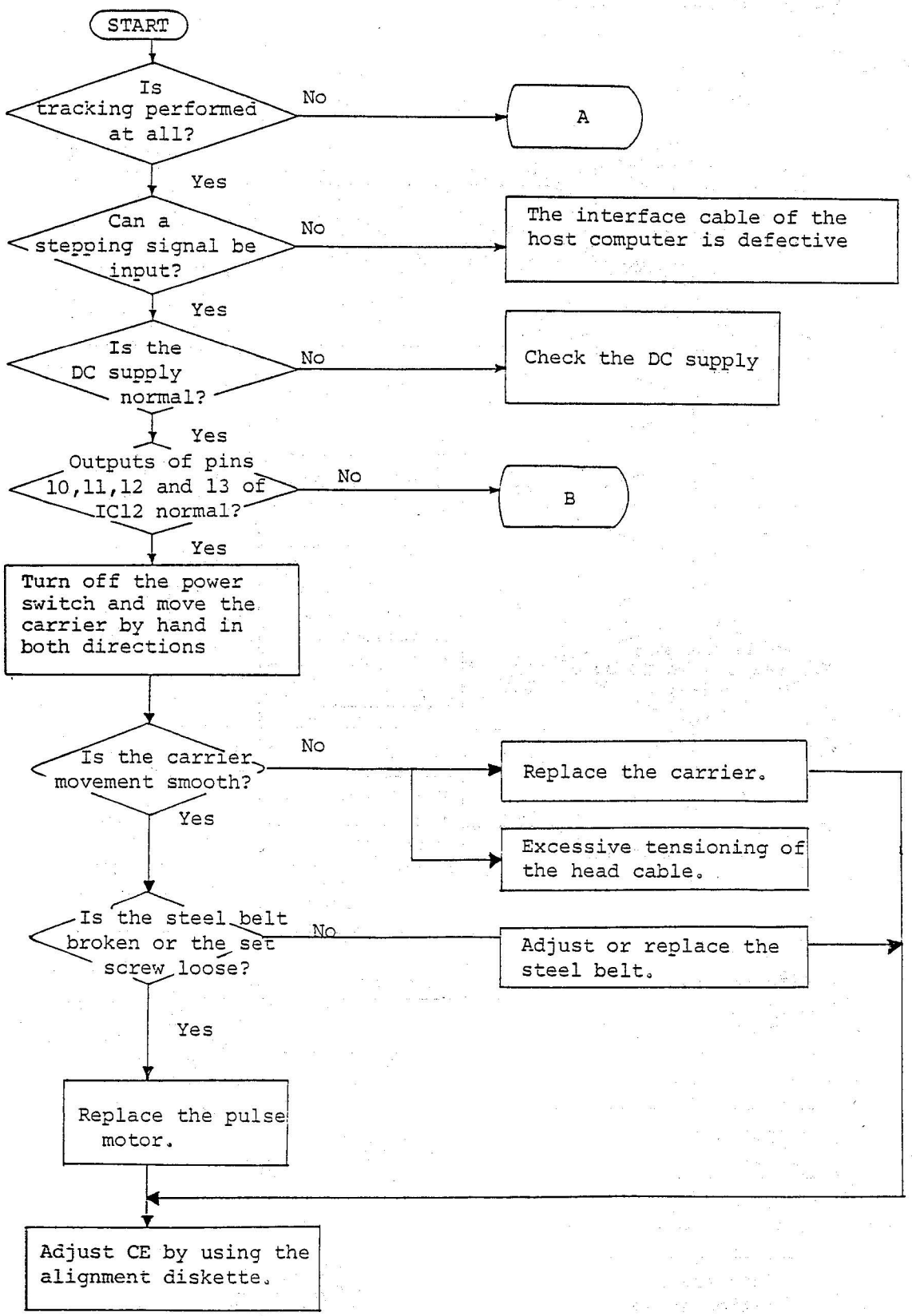

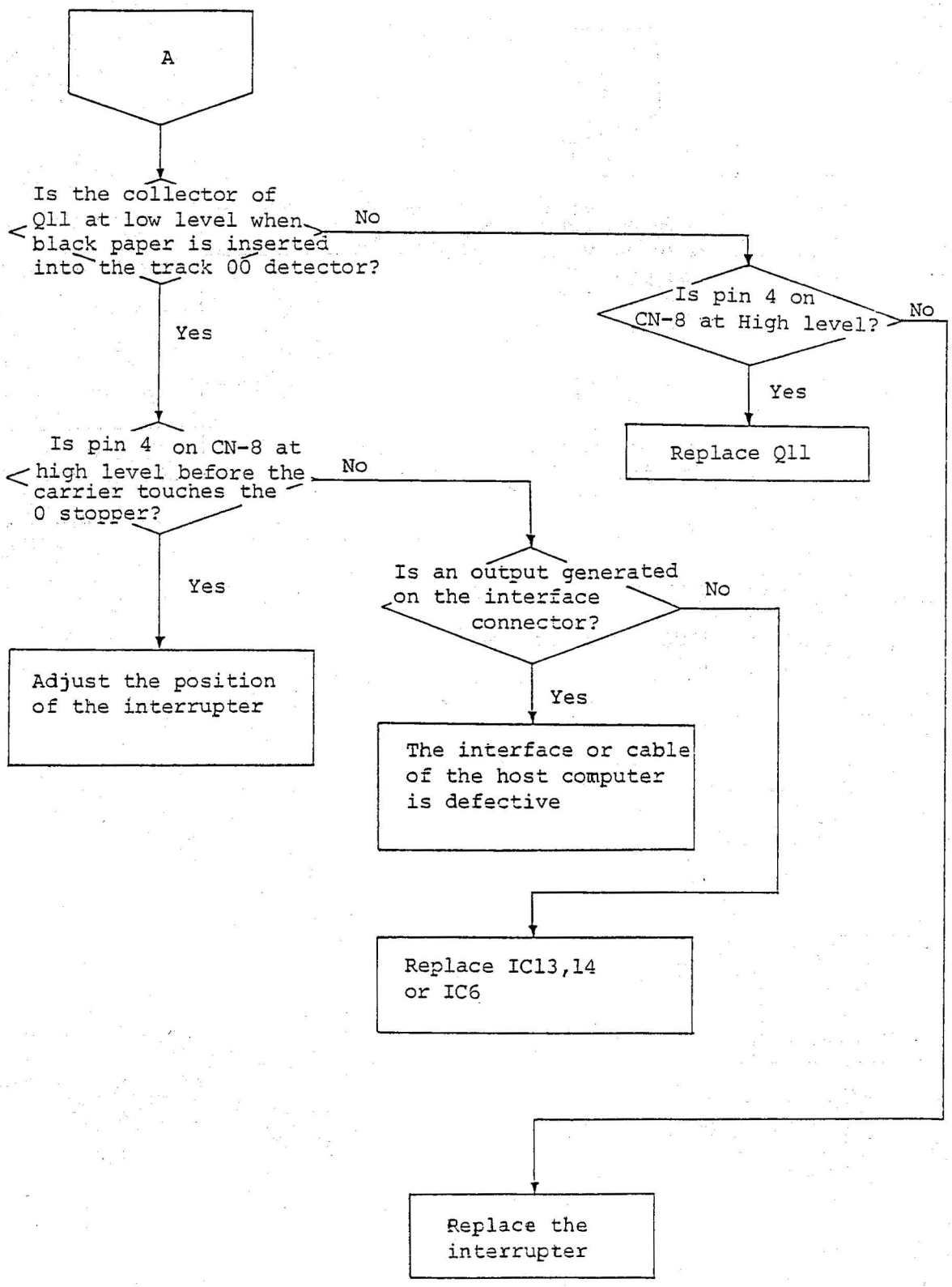
A
Is the collector of Q11 at low level when black paper is inserted into the track 00 detector?
No
Yes
Is pin 4 on CN-8 at High level?
No
Yes
Replace Q11
Is pin 4 on CN-8 at high level before the carrier touches the 0 stopper?
No
Yes
Adjust the position of the interrupter
Is an output generated on the interface connector?
No
Yes
The interface or cable of the host computer is defective
Replace IC13,14 or IC6
Replace the interrupter

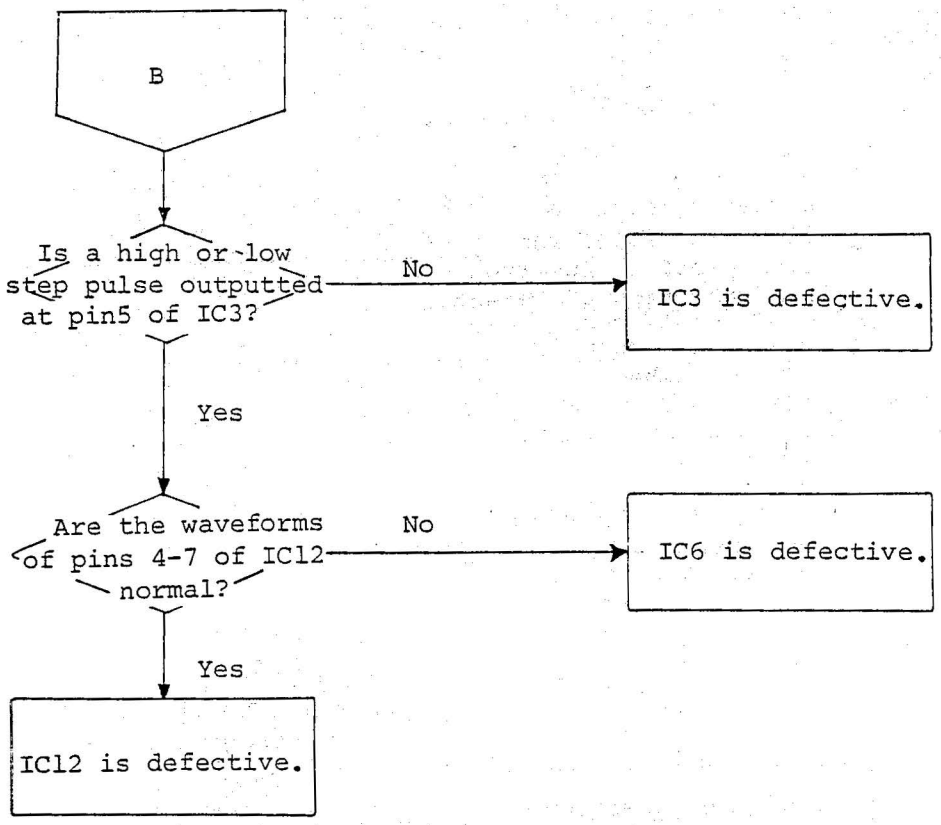
B
Is a high or low step pulse outputted at pin5 of IC3?
No
IC3 is defective.
Yes
Are the waveforms of pins 4-7 of IC12 normal?
No
IC6 is defective.
Yes
IC12 is defective.

3-3 Write Circuit Check

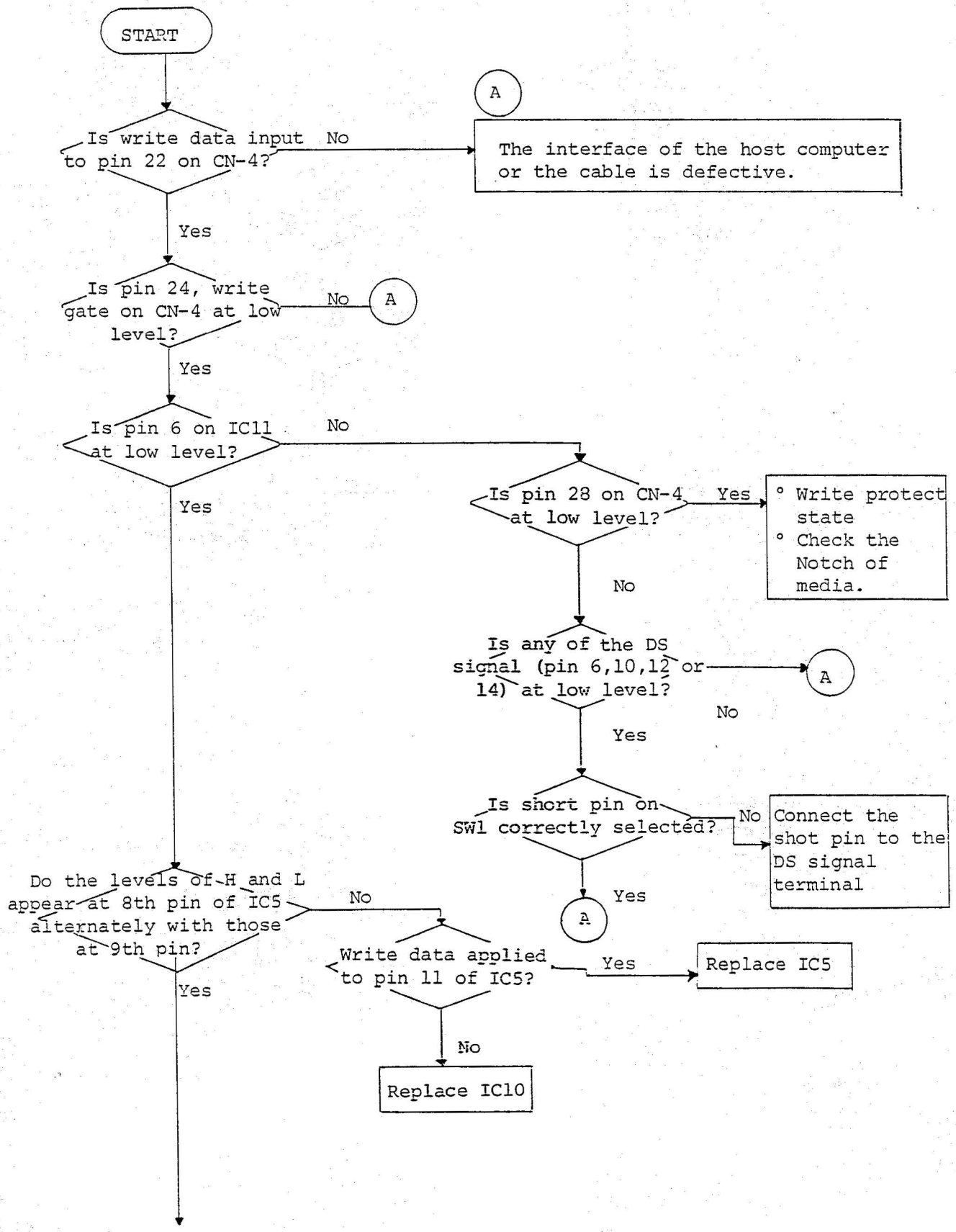

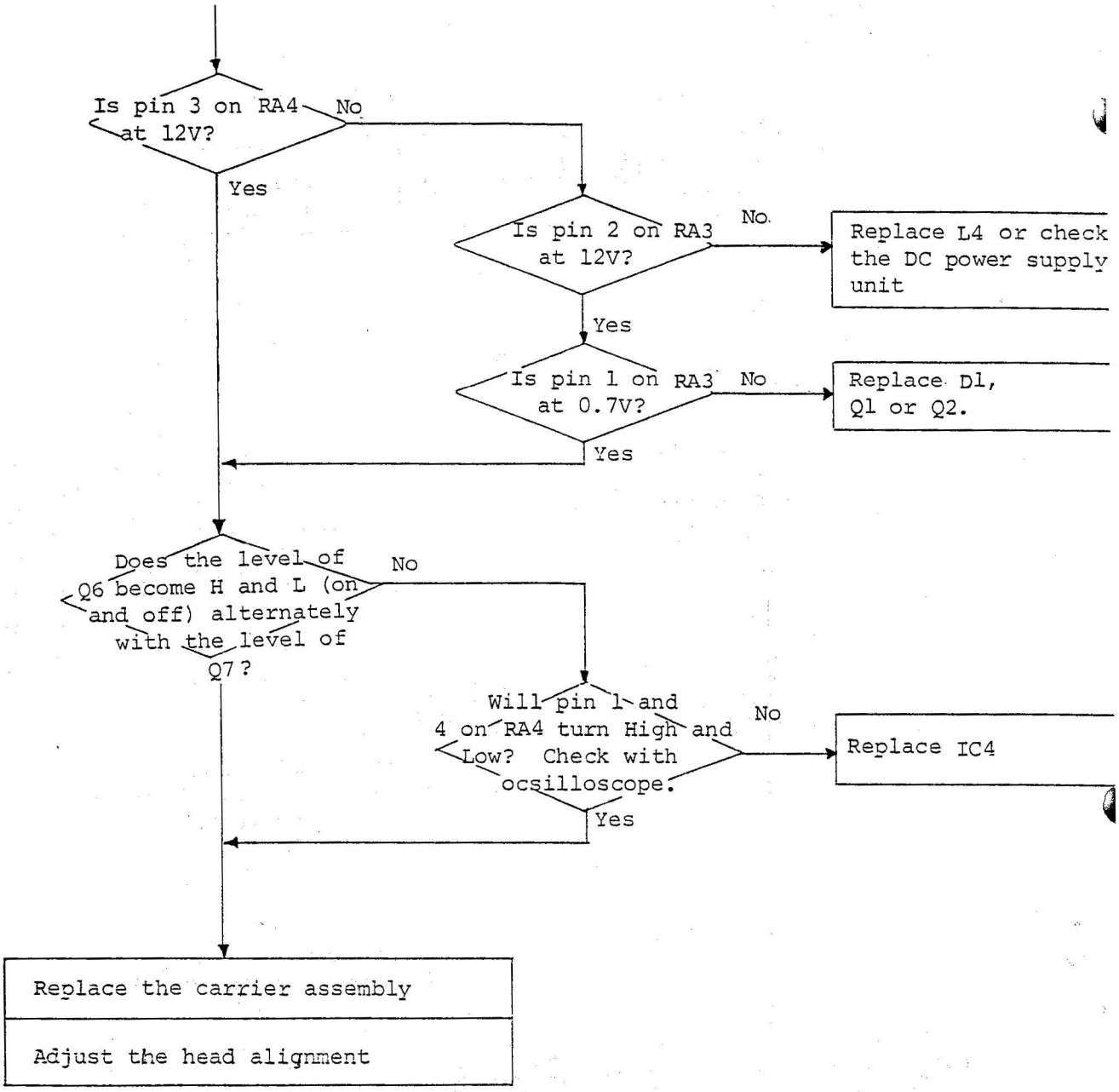
Is pin 3 on RA4 at 12V?
No
Yes
Is pin 2 on RA3 at 12V?
No.
Replace L4 or check the DC power supply unit
Yes
Is pin 1 on RA3 at 0.7V?
No
Replace D1, Q1 or Q2.
Yes
Does the level of Q6 become H and L (on and off) alternately with the level of Q7?
No
Will pin 1 and 4 on RA4 turn High and Low? Check with ocsilloscope.
No
Replace IC4
Yes
Replace the carrier assembly
Adjust the head alignment

3-4 Read Circuit Malfunction

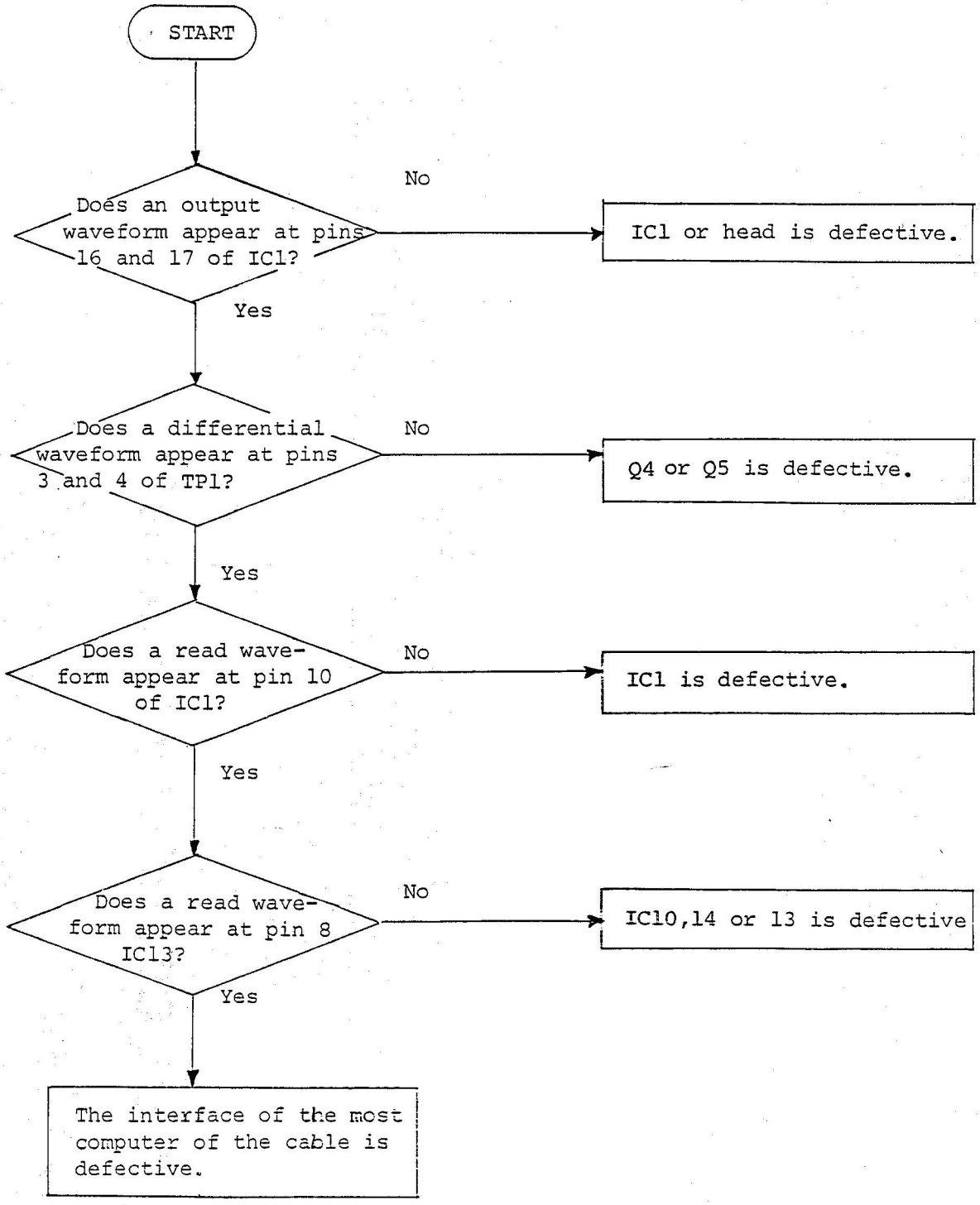

A&A JAPAN, LTD.

TANDY

COLOR COMPUTER DISK DRIVE

PARTS PRICE LIST
& RECOMMENDED PARTS LIST

Catalog Number

MODEL FB-503

AUG. 5, 1985

TEC . TOKYO ELECTRIC CO., LTD.

1 MAIN UNIT

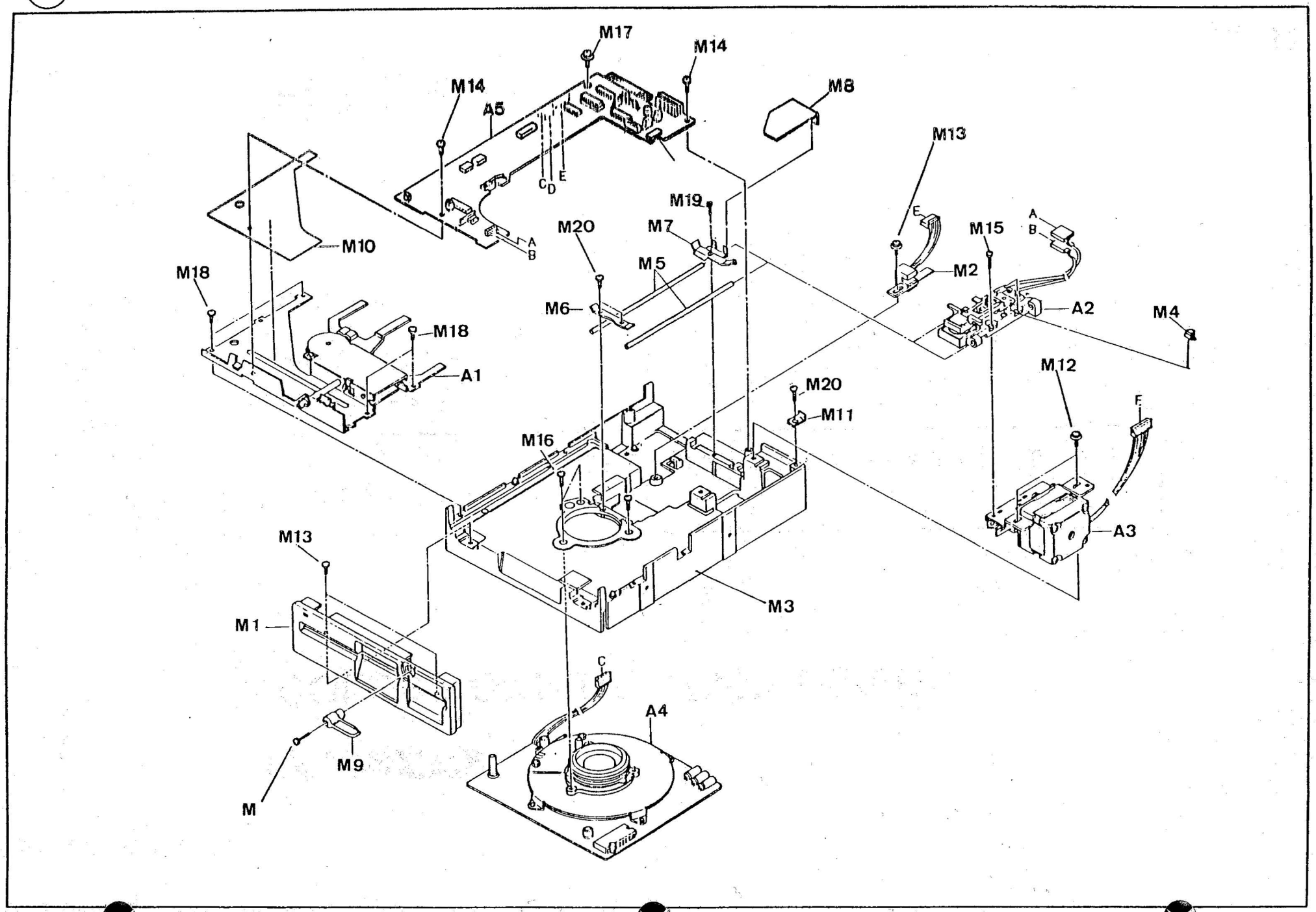
M17
M14
M14
A5
M8
M13
C
D
E
M19
M20
M7
M15
A
B
A
B
M10
M5
M2
M18
M6
A2
M4
M18
A1
M12
M20
M11
F
M16
A3
M13
M3
M1
C
A4
M9
M

A&A JAPAN, LTD.
WHOLE PARTS LIST/MFR. SELECTION LIST

DESTINATION:

CHECKED BY:

CAT. NO.: 8790133

DATE: Aug. 5, 1985

MODEL NO. :

PAGE: 1 OF 13

MFR'S SELECTION FOR

MFR.: TEC

PO NO. /

RS LOCATION NO.	DESCRIPTION	REF. NO.	MFR. PART NO.	PRIME SOURCE /SUBSTITUTE	RANK	Q'TY PER UNIT	UNIT COST	SELECTION	
								Q'TY	EXTENSION US $
	Base Clamp Assembly	A1	CFABK-60102			1			
	Carrier B Assembly	A2	CFABK-60303			1			
	Motor, Pulse Assembly	A3	CFABK-60405			1			
	Motor, Direct Drive Assembly	A4	CFAAK-60304			1			
	PCB Assembly, MAIN	A5	CFEAK-06145			1			
	Cover Assembly, Front	M1	CFAAK-60801			1			
	Interrupter Assembly	M2	CFAAK-61201			1			
	Base, Main	M3	CFA40-60102			1			
	Spring, Vibration-Proof	M4	CFAAK-62501			1			
	Shaft, Carrier	M5	CFA10-61201			2			
	Shaft Support, Inside	M6	CFA20-60601			1			
	Shaft Support, Outside	M7	CFA20-60701			1			
	Guide, Cable	M8	CFA35-61401			1			
	Lever, Clamp	M9	CFA35-60602			1			
	Plate, Insulation	M10	CFA45-60901			1			

A&A JAPAN, LTD.
WHOLE PARTS LIST/MFR. SELECTION LIST

DESTINATION:

CHECKED BY:

CAT. NO.: 8790133

DATE: Aug. 5, 1985

MODEL NO.:

PAGE: 2 OF 13

MFR'S SELECTION FOR

MFR.: TEC

PO NO. /

RS LOCATION NO.	DESCRIPTION	REF. NO.	MFR. PART NO.	PRIME SOURCE /SUBSTITUTE	RANK	Q'TY PER UNIT	UNIT COST	SELECTION Q'TY	SELECTION EXTENSION US $
	Terminal	M11	EEH00-05600			1			
	Screw, Machine Double Sems with Pan Head M4x10	M12	SSX240100A2			2			
	Screw, with Washer M3x6	M13	SSJ230060A2			3			
	Screw, Machine Sems with Pan Head M2.6x6	M14	SSW226060A2			1			
	Screw, Machine Double Sems with Pan Head M2.6x8	M15	CFA45-62601			2			
	Screw, Machine Bind with Pan Head M3x6	M16	CFA45-61401			3			
	Screw, with Washer M3x8	M17	SSJ230080A2			1			
	Screw, Machine Bind with Pan Head M3x8	M18	CFA45-61402			4			
	Screw, Dish Head M3x8	M19	SSS230080A2			1			
	Screw,Machine Sems with Pan head M3x6	M20	SSW230060A2			2			

A&A JAPAN, LTD.
WHOLE PARTS LIST/MFR. SELECTION LIST

DESTINATION:

CHECKED BY:

CAT. NO.: 8790133

DATE: Aug. 5, 1985

MODEL NO. :

MFR'S SELECTION FOR

MFR.: TEC

PO NO. /

RS LOCATION NO.	DESCRIPTION	REF. NO.	MFR. PART NO.	PRIME SOURCE /SUBSTITUTE	RANK	Q'TY PER UNIT	UNIT COST	SELECTION	
								Q'TY	EXTENSION US $
	Base Assembly, Clamp	A1	CFABK-60102			1			
	Clamp Assembly	M20	CFABK-60601			1			
	Base, Clamp	M21	CFAAK-60102			1			
	Arm, Clamp	M22	CFAAK-60201			1			
	Shaft, Clamp Lever	M23	CFA10-60301			1			
	Spring, Clamp Lever	M24	CFA30-60301			1			
	Spring, Cam Lock	M25	CFA30-60601			1			
	Cam, Clamp	M26	CFA35-60501			1			
	Cam, Clamp Lock	M27	CFA35-60901			1			
	Ring, E-type M3	M28	SRE030000E0			3			

A2 CARRIER B BK

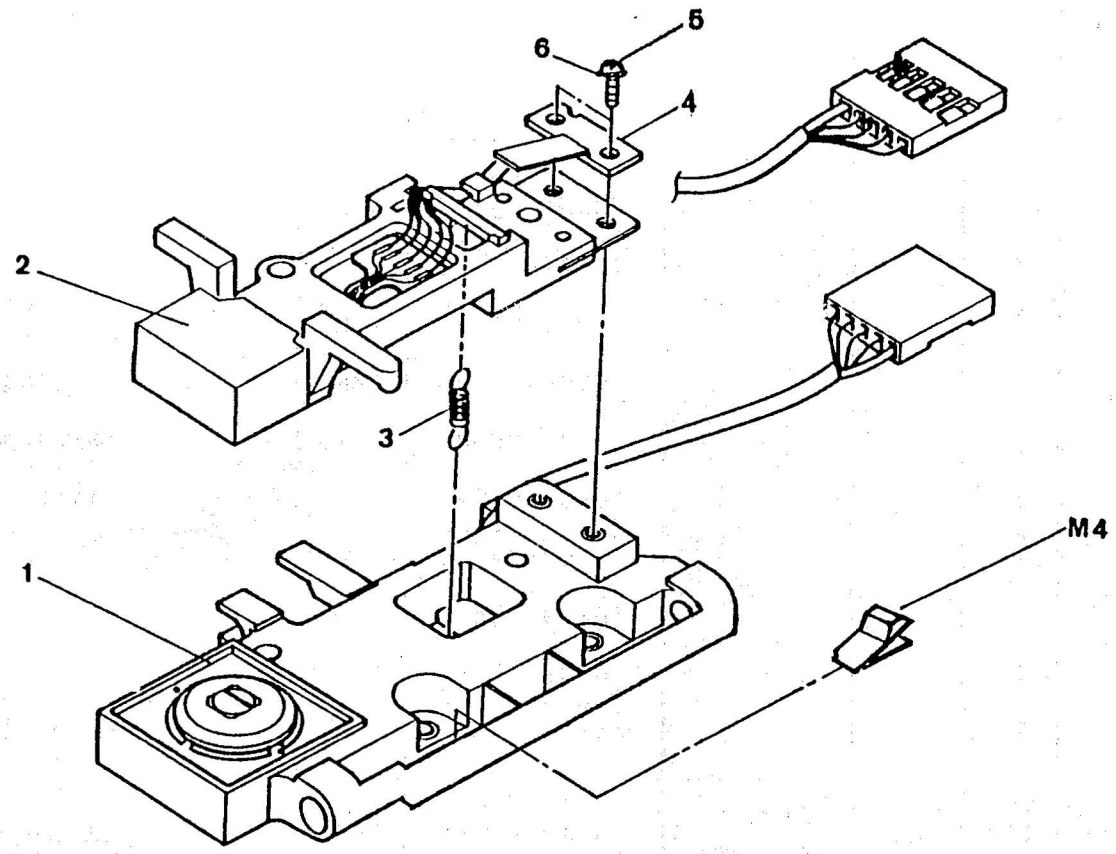

A&A JAPAN, LTD.
WHOLE PARTS LIST/MFR. SELECTION LIST

DESTINATION:

CAT. NO.:

MODEL NO.:

MFR.:

CHECKED BY:

DATE: Aug.23, 1985

MFR'S SELECTION FOR

PO NO. /

RS LOCATION NO.	DESCRIPTION	REF. NO.	MFR. PART NO.	PRIME SOURCE /SUBSTITUTE	RANK	Q'TY PER UNIT	UNIT COST	SELECTION	
								Q'TY	EXTENSION US $
	Carrier B Assembly	A2	CFABK-60303		A-2	1			
	Carrier Assembly	A2-1	CFAAK-60503			1			
			CFAAK-60505			1			
	Head Arm Assembly	A2-2	CFAAK-60603			1			
			CFAAK-60605			1			
	Head Spring	A2-3	CFA30-60201			1			
	Head Arm Supporter	A2-4	CFA20-61701			1			
	Flanged Screw	A2-5	SSN226060A7			2			
	Washer	A2-6	SWA030050A7			2			

A3 PULSE MOTOR BK

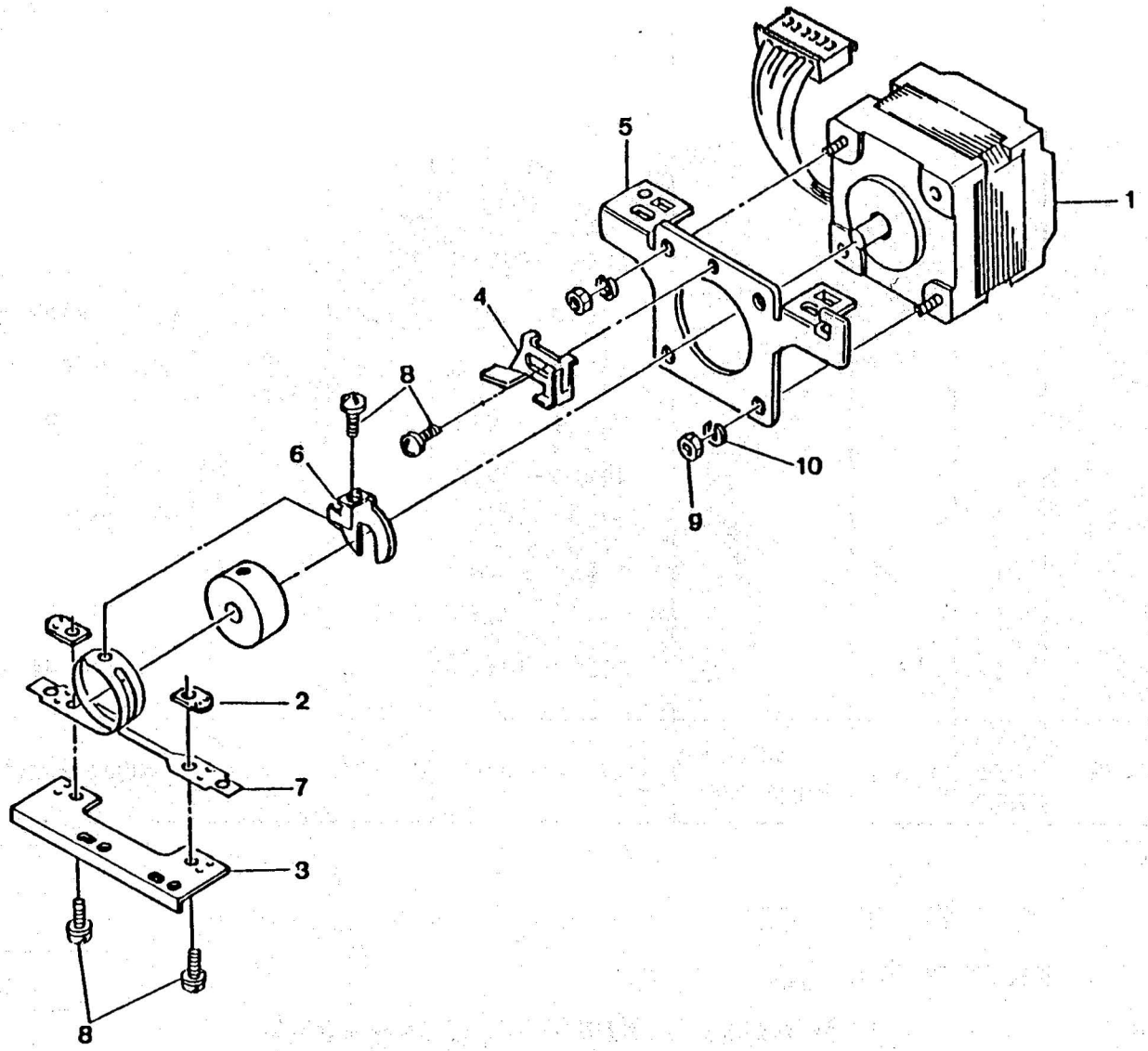

A&A JAPAN, LTD.
WHOLE PARTS LIST/MFR. SELECTION LIST

DESTINATION:

CHECKED BY:

CAT. NO.:

DATE: Aug. 23, 1985

MODEL NO.:

PAGE: 5 OF 13

MFR'S SELECTION FOR

MFR.:

PO NO. /

RS LOCATION NO.	DESCRIPTION	REF. NO.	MFR. PART NO.	PRIME SOURCE /SUBSTITUTE	RANK	Q'TY PER UNIT	UNIT COST	SELECTION Q'TY	SELECTION EXTENSION US $
	Motor, Pulse Assembly	A-3	CFABK-60405			1			
	Pulse Motor K	A3-1	CFAAK-60703			1			
			CFAAK-60709			1			
			CFAAK-60711			1			
	Belt Fastening Plate	A3-2	CFA20-60501			2			
	Belt Suppoter	A3-3	CFA20-61001			1			
	Cable Holder	A3-4	CFA20-63601			1			
	ST Motor Frame	A3-5	CFA20-62901			1			
	Belt Stopper 2	A3-6	CFA20-63701			1			
	Belt	A3-7	CFA45-60701			1			
	Sems Screw	A3-8	CFA45-62301			4			
	Nut	A3-9	SNC030018A2			2			
	Spring Washer	A3-10	SWS030000A2			2			
	When A-3 Motor Pulse Assembly Disassembling CFABK-60801 Belt Tensioning Jig ($528) Required.								

A&A JAPAN, LTD.
WHOLE PARTS LIST/MFR. SELECTION LIST

DESTINATION:

CHECKED BY:

CAT. NO.: 87900133

DATE: Aug. 5, 1985

MODEL NO.:

PAGE: 6 OF 13

MFR'S SELECTION FOR

MFR.: TEC

PO NO. /

RS LOCATION NO.	DESCRIPTION	REF. NO.	MFR. PART NO.	PRIME SOURCE /SUBSTITUTE	RANK	Q'TY PER UNIT	UNIT COST	SELECTION Q'TY	SELECTION EXTENSION US $
	PCB Assembly, MAIN	A5							
	Linner IC, HA16631P	IC1	EAS00-12700			1			
	IC, SN75452 TTL	IC2	EAQ00-05000			1			
	IC, SN74LS74A TTL	IC3,5	EAQ00-12700			2			
	IC, SN7406 TTL	IC4	EAQ00-07500 or Equivalent			1			
	IC, M53206 TTL		EAQ00-07514						
	CPU EC-0877	IC6	EAO06-40700			1			
	IC, SN74LS86 TTL	IC7	EAQ00-15900 or Equivalent			1			
	IC, M74LS86 TTL		EAQ00-15914						
	IC, SN74LS14 TTL	IC10	EAQ00-17200 or Equivalent			1			
	IC, DN74LS14 TTL		EAQ00-17206						
	IC, SN7438 TTL	IC11, 13	EAQ00-10000 or Equivalent			2			
	IC, M53238 TTL		EAQ00-10014						
	Transistor Array uPA2003	IC12	EAS00-03000			1			

A&A JAPAN, LTD.
WHOLE PARTS LIST/MFR. SELECTION LIST

DESTINATION:

CHECKED BY:

CAT. NO.: 8790133

DATE: Aug. 5, 1985

MODEL NO. :

PAGE: 7 OF 13

MFR'S SELECTION FOR

MFR.: TEC

PO NO. /

RS LOCATION NO.	DESCRIPTION	REF. NO.	MFR. PART NO.	PRIME SOURCE /SUBSTITUTE	RANK	Q'TY PER UNIT	UNIT COST	SELECTION Q'TY	SELECTION EXTENSION US $
	IC, SN74LS02 TTL IC, M74LS02 TTL	IC14	EAQ00-15800 or Equivalent EAQ00-15814			1			
	Transistor 2SC2021(NPN) Sillicon	Q1,2, 11	EAA00-18900			3			
	Transistor 2SA937(PNP) Sillicon	Q3-7, 10	EAB00-10300			6			
	Transistor DTC114(NPN) Sillicon	Q8,9	EAA00-18800			2			
	Transistor 2SA881(PNP) Sillicon Transistor 2SB909A(PNP) Sillicon	Q13	EAB00-10700 or Equivalent EAB00-11500			2			
	Zener Diode RD3.3EB	D1	EADT0-17900			1			
	Diode 1SS133	D2,3, 5	EACT0-09400			3			
	Zener Diode MTZ5.1B	D4	EADT0-19900			1			
	Diode ISR35-200A Sillicon	D8	EACT0-09200			1			

A&A JAPAN, LTD.
WHOLE PARTS LIST/MFR. SELECTION LIST

DESTINATION:

CHECKED BY:

CAT. NO.: 8790133

DATE: Aug. 5, 1985

MODEL NO.:

PAGE: 8 OF 13

MFR'S SELECTION FOR

MFR.: TEC

PO NO. /

RS LOCATION NO.	DESCRIPTION	REF. NO.	MFR. PART NO.	PRIME SOURCE /SUBSTITUTE	RANK	Q'TY PER UNIT	UNIT COST	SELECTION Q'TY	SELECTION EXTENSION US $
	Diode Array DAN201	DA1,2, 3,4	EAC00-09300			4			
	Diode Array DAP201	DA5	EAC00-09900			1			
	Resistor, Carbon 220ohm ¼W ±5%	R1,9	ECC1GT221JB			2			
	Resistor, Carbon 39kohm ¼W ±5%	R2,28	ECC1GT393JB			2			
	Resistor, Carbon 560ohm ¼W ±5%	R3,12	ECC1GT561JB			2			
	Resistor, Carbon 100kohm ¼W ±5%	R4,5	ECC1GT104JB			2			
	Resistor, Carbon 820ohm ¼W ±5%	R6	ECC1GT821JB			1			
	Resistor, Carbon 270ohm ¼W ±5%	R7,8	ECC1GT271JB			2			
	Resistor, Carbon 10kohm ¼W ±5%	R10,14 19,20, 22,34, 38	ECC1GT103JB			7			

A&A JAPAN, LTD.
WHOLE PARTS LIST/MFR. SELECTION LIST

DESTINATION:

CHECKED BY:

CAT. NO.: 8790133

DATE: Aug. 5, 1985

MODEL NO.:

PAGE: 9 OF 13

MFR'S SELECTION FOR

MFR.: TEC

PO NO. /

RS LOCATION NO.	DESCRIPTION	REF. NO.	MFR. PART NO.	PRIME SOURCE /SUBSTITUTE	RANK	Q'TY PER UNIT	UNIT COST	SELECTION Q'TY	SELECTION EXTENSION US $
	Resistor, Carbon 47Kohm ¼w ±5%	R11,26	ECC1GT473JB			2			
	Resistor, Carbon 470ohm ¼w ±5%	R13,29	ECC1GT471JB			2			
	Resistor, Carbon 5.6Kohm ¼w ±5%	R15,16	ECC1GT562JB			2			
	Resistor, Carbon 2.2Kohm ¼w ±5%	R17,18	ECC1GT222JB			2			
	Resistor, Metal Film Mold 47ohm ¼w ±5%	R21	CFE61-05501			1			
	Resistor, Carbon 100ohm ¼w ±5%	R23	ECC1GT101JB			1			
	Zener Diode RD3.3EB		EADT0-17900			1			
	Resistor, Metal Film Mold 110ohm 1w ±5%	R24	CFE61-05301			1			
	Resistor, Carbon 2.4Kohm ¼w ±5%	R27	ECC1GT242JB						
	Resistor, Carbon 1Kohm ¼w ±5%	R35,39	ECC1GT102JB			2			

A&A JAPAN, LTD.
WHOLE PARTS LIST/MFR. SELECTION LIST

DESTINATION:

CHECKED BY:

CAT. NO.: 8790133

DATE: Aug. 5, 1985

MODEL NO.:

PAGE: 10 OF 13

MFR'S SELECTION FOR

MFR.: TEC

PO NO. /

RS LOCATION NO.	DESCRIPTION	REF. NO.	MFR. PART NO.	PRIME SOURCE /SUBSTITUTE	RANK	Q'TY PER UNIT	UNIT COST	SELECTION Q'TY	SELECTION EXTENSION US $
	Resistor, Carbon 180ohm ¼w ±5%	R36	ECC1GT181JB			1			
	Resistor, Carbon 150ohm ¼w ±5%	R37	ECC1GT151JB			1			
	Resistor Array 2Kx2, 22Kx2	RA1	ECM00-18300			1			
	Resistor Array 3Kx2, 10Kx2	RA2	ECM00-18100			1			
	Resistor Array 2.2K,10K, 150,270	RA3	ECM00-17900			1			
	Resistor Array 330x2, 2Kx2	RA4	ECM00-18200			1			
	Resistor Array 2Kx2, 10Kx4	RA5	ECM00-18000			1			
	Resistor Array 470x2, 1Kx2	RA6	ECM00-18400			1			
	Resistor Array 47Kx4 1/8w ±5%	RA7,8, 9	ECM00-00300			3			
	Resistor Array EXB-P86472K	RA10	ECM00-08800						
	Resistor Array EXB-RB7151K	RA11	ECM00-15700 or Equivalent						
	IC Socket		EED00-05600						

A&A JAPAN, LTD.
WHOLE PARTS LIST/MFR. SELECTION LIST

DESTINATION:

CHECKED BY:

CAT. NO.: 8790133

DATE: Aug. 5, 1985

MODEL NO.:

PAGE: 11 OF 13

MFR'S SELECTION FOR

MFR.: TEC

PO NO. /

RS LOCATION NO.	DESCRIPTION	REF. NO.	MFR. PART NO.	PRIME SOURCE /SUBSTITUTE	RANK	Q'TY PER UNIT	UNIT COST	SELECTION Q'TY	SELECTION EXTENSION US $
	Capacitor, Ceramic 510pF 50V ±5%	C1,4	EBJT0-11400			2			
	Capacitor, Ceramic 0.1uF 50V +80%,-20%	C2,3, 6,8, 9,11, 15,20, 21,23, 24,25, 27	EBIT0-00919 or Equivalent EBIT0-00902 or Equivalent EBIT0-00900			13 13 13			
	Capacitor, Ceramic	C2,3, 6,8	(EBJT0-15400)			4			
	Capacitor, Ceramic	C15,20, 21,23, 27	(EBJT0-05200)			5			
	Capacitor, Ceramic 2200pF 50V ±10%	C5	EBJT0-07200			1			
	Capacitor, Ceramic 100pF 50V ±5%	C10	EBJT0-07500			1			
	Capacitor, Ceramic 560pF 50V ±5%	C12	EBJT0-11500			1			
	Capacitor, Ceramic 300pF 50V ±5%	C13	EBJT0-13900			1			
	Capacitor, Electrolytic 10uF 16V	C14,16	EBB00-53800			2			

A&A JAPAN, LTD.
WHOLE PARTS LIST/MFR. SELECTION LIST

DESTINATION:

CHECKED BY:

CAT. NO.: 8790133

DATE: Aug. 5, 1985

MODEL NO.:

PAGE: 12 OF 13

MFR'S SELECTION FOR

MFR.: TEC

PO NO. /

RS LOCATION NO.	DESCRIPTION	REF. NO.	MFR. PART NO.	PRIME SOURCE /SUBSTITUTE	RANK	Q'TY PER UNIT	UNIT COST	SELECTION Q'TY	SELECTION EXTENSION US $
	Capacitor, Electrolytic 1uF 50V ±20%	C17	EBB00-34700			1			
	Capacitor, Ceramic 1000pF 50V ±10%	C19	EBJT0-07100			1			
	Capacitor, Electrolytic 47uF 16V	C26	EBB00-34800			1			
	Capacitor, Electrolytic 100uF 6.3V	C28	EBB00-34900			1			
	Cerarock KMFC10015	XL,C18	EKH00-04600			1			
	Variable Resistor TM64K(PV3) 203K	VR1	ECA00-14200			1			
	L.E.D LN25CP	LED A, B	EAH00-06200			1			
	Choke Coil ELEBT331KA	L1,2	EDDT0-06800			2			
	Choke Coil ELEBT101KA	L3	EDDT0-06900			1			
	Choke Coil ELEBT470KA	L4	EDDT0-06700			1			

A&A JAPAN, LTD.
WHOLE PARTS LIST/MFR. SELECTION LIST

DESTINATION:

CHECKED BY:

CAT. NO.: 8790133

DATE: Aug. 5, 1985

MODEL NO. :

PAGE: 13 OF 13

MFR'S SELECTION FOR

MFR.: TEC

PO NO. /

RS LOCATION NO.	DESCRIPTION	REF. NO.	MFR. PART NO.	PRIME SOURCE /SUBSTITUTE	RANK	Q'TY PER UNIT	UNIT COST	SELECTION Q'TY	SELECTION EXTENSION US $
	Conn. W-P5004#01 (4Pin male)	TP1	EEB00-51200			1			
	Conn. W-P5005#01 (5Pin male)	TP2	EEB00-51300			1			
	Conn. 65625-210 (10Pin male)	CN1 A,B	EEB00-54600						
	Conn. S-10015#1 (4Pin male with holder)	CN2	EEB00-61100			1			
	Conn. 67095-006 (6Pin male)	CN3	EEB00-52000			1			
	Conn. 67094-004 (4Pin male)	CN5	EEB00-50500			1			
	Conn. 67094-003 (3Pin male)	CN6	EEB00-50400			1			
	Conn. 67094-005 (5Pin male)	CN8	EEB00-51900			1			
	Sensor, Index	M29	CFA45-60301			1			
	Sensor, Write Protect	M30	CFA45-60401			1			
	Screw, Machine with Pan Head M2x6	M31	SSZ220060A3			1			
	Bolt M2x6	M31	(CFA45-61002)			1			

REFERENCE DOCUMENT: SPECIFICATION

(FB-500 SERIES)

Rev.B Jan. 13, '83
Rev.C Mar. 28, '83
Rev.D Aug. 1, '83
Rev.E Sept. 26, '83
Rev.F Feb. 2, '84
Rev.G May. 10, '84

5.25 INCH FLEXIBLE DISK DRIVE

GENERAL SPECIFICATIONS

MODEL FB-500 SERIES

1. SINGLE SIDE, DOUBLE DENSITY, 48TPI (FB-501)
2. SINGLE SIDE, DOUBLE DENSITY, 96TPI (FB-502)
3. DOUBLE SIDE, DOUBLE DENSITY, 48TPI (FB-503)
4. DOUBLE SIDE, DOUBLE DENSITY, 96TPI (FB-504)

TOKYO ELECTRIC CO.,LTD.

FB-500 DOCUMENT REVISION LEVEL

NO.FB-1

REFERENCE DOCUMENT SPECIFICATION

REVISED	DATE	PAGE	REMARKS
F	2/84	TITLE PAGE	REQUIRE REVISIONS
		2- 3	"
		3- 5	"
		3- 6	"
		5- 1	"
		5- 2	"
G	5/84	1- 1	Average Access Time 88ms → 93,94ms
		1- 3	REQUIRE REVISIONS
		1- 5	1-4(1)-(C) Average Load Current
			0.7A → 0.28A, 0.5A → 0.2A

CONTENTS

Chapter 1		SPECIFICATIONS	1-1
	1-1	Major Specifications	1-1
	1-2	Mechanical Dimensions and Installation	1-2
	1-3	Physical Specifications	1-4
	1-4	Power Requirements	1-4
	1-5	Reliability	1-5
Chapter 2		CONSTRUCTIONS	2-1
	2-1	Magnetic Head	2-1
	2-2	Head Positioning Mechanism	2-1
	2-3	Head Load Mechanism (Option)	2-1
	2-4	Disk Drive Mechanism	2-1
	2-5	Read/Write and Control Electronics	2-1
Chapter 3		INTERFACE	3-1
	3-1	Signal Interface	3-1
	3-1-1	Input Signal Lines (FDD ← HOST)	3-5
	3-1-2	Output Signal Lines (FDD → HOST)	3-7
	3-2	Power Interface	3-8
	3-3	Frame Ground	3-8
Chapter 4		TIMING CHART	4-1
Chapter 5		SELECT PIN SETTING	5-1
	5-1	Input Signal Termination	5-1
	5-2	FDD Number Shorting Plug	5-1
	5-3	Shorting Plug for Testing (MX)	5-1

CHAPTER 1-SPECIFICATIONS

1-1 Major Specifications

Model Name				FB-501	FB-502	FB-503	FB-504
Type				Single-side	Single-side Double-track	Double-side	Double-side Double-track
Items			Unit				
Memory Capacity (MFM)	Unformatted Per Disk		Bytes	250K	500K		1M
	Formatted Per Disk		Bytes	164K	328K		656K
Media	Basic Format	Bytes/Sectors	Bytes	256			
		Sectors/Track		16 (Soft Sector)			
	Track Radius	OD	mm	57.151			
		ID	mm	36.514	36.249	34.396	34.131
	Number of Recording Sides			1		2	
	Number of Cylinders			40	80	40	80
	Number of Tracks			40	80		160
	Index			1			
Recording	Recording Method			FM/MFM			
	Packing Density		BPI	5536	5576	5876	5922
	Track Density		TPI	48	96	48	96
	Data Transfer Speed		Bits/sec	125K/250K			
Access Time	Average Latency		msec.	100			
	Seek Time		msec	6	3	6	3
	Settling Time		msec.	15	15	15	15
	Average Access Time		msec.	93	94	93	94
	Head Load Time		msec.	———		Option (35ms)	
	Motor Starting Time		msec.	500			
Spindle Speed			RPM	300			

This drive has been designed conforming to the media specified in ISO, ANSI, ECMA, and JIS.

1-2 Mechanical Dimensions and Installation

(1)	Width	146mm (5.75 Inches)
(2)	Height	41mm (1.61 Inches)
(3)	Depth	204mm (8.03 Inches)
(4)	Dimensions	See Fig. 1-2
(5)	Weight	1.4Kg
(6)	Cooling System	Natual Air Cooling
(7)	Installation	3 Ways (See Fig. 1-1)

1. Vertical Mount: LED lamp up or down. [Fig (a) or (b)]
2. Horizontal Mount: Drive Motor down. [Fig (c)]

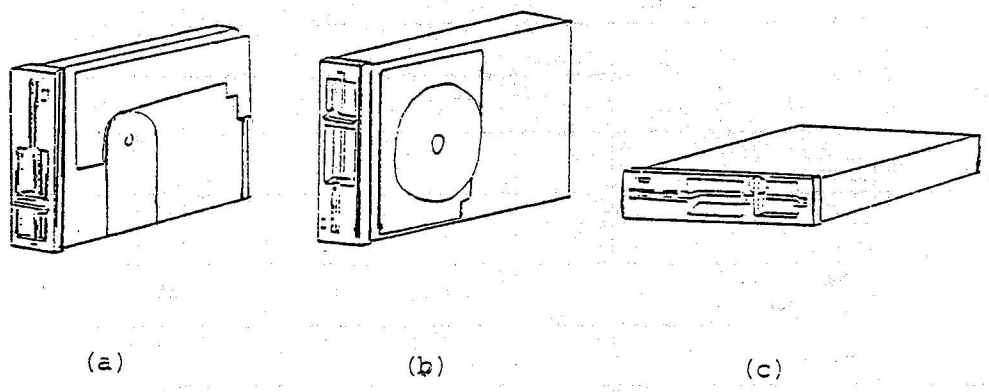

(a) (b) (c)

Fig. 1-1 Installation

NOTE: Use the mounting holes in the side frames or bottom frame of the FDD with M3 screws. (See Fig. 1-2)

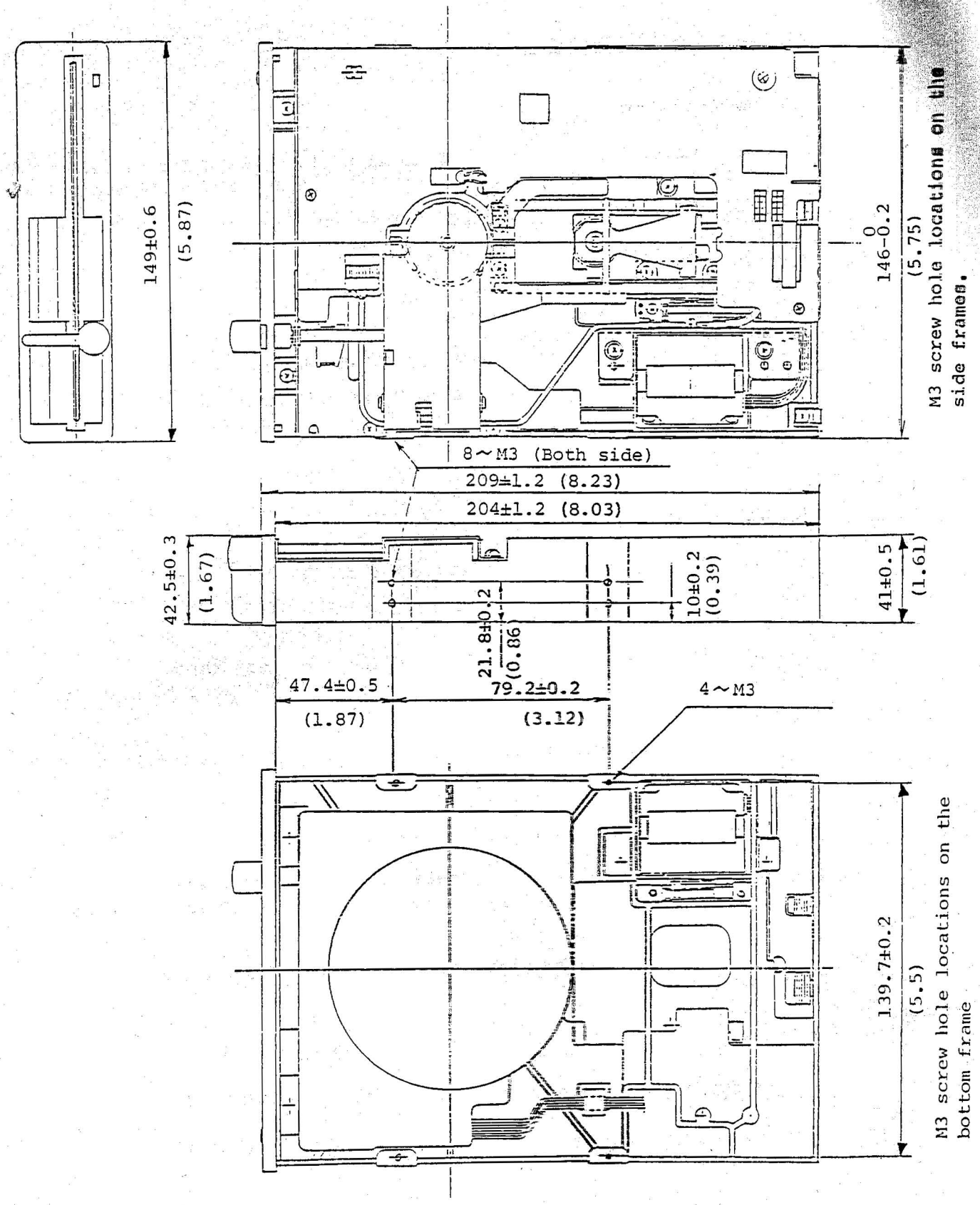

NOTE: All dimensions are in mm.

Dimensions in ( ) are in inches.

Fig. 1-2 Dimensions

1-3 Physical Specifications

(1) Ambient Temp.

(a)	Operating	5 to 45°C (10 to 52°C for media. Refer to the ISO Specifications).
(b)	Shipping	-40 to 60°C
(c)	Storage	-22 to 53°C

(2) Relative Humidity

(a)	Operating	20 to 80%RH (Non-condensing)
(b)	Non-operating	8 to 90%RH (Non-condensing)
(c)	Max Wet-bulb Temp.	29°C (84°F)

(3) Vibration

(a)	Operating	Acceleration :	Less than 0.25G (10~25Hz)
(b)	Shipping	Acceleration :	Less than 2G (Less than 100Hz)

(The unit must be packaged as per the TEC standard.)

(4) Shock

(a)	Shipping	Acceleration :	Less than 40G (Less than 10ms)

(The unit must be packaged as per the TEC standard.)

(5) Dust

The drive should not be used in a dusty location.

1-4 Power Requirements

(1) +12V DC

(a)	Tolerance	: ±5%
(b)	Ripple Voltage	: Less than 100mV P-P
(c)	Average Load Current	: Approx. 0.28A (with head load mechanism) 0.2A (without head load mechanism)
(d)	Surge Current	: 1A (200msec at spindle motor start-up)

(2) +5V DC

(a)	Tolerance	: ±5%
(b)	Ripple Voltage	: Less than 50mV P-P
(c)	Average Load Current	: Approx. 0.5A
(d)	Max. Load Current	: Less than 0.7A

1-5 Reliability

(1)	Mean Time Between Failures (MTBF)	: 10000 Power On Hours
(2)	Mean Time to Repair (MTTR)	: 30 minutes
(3)	Error Rates	
	(a) Soft Read Errors	: Less than one error per 10^9 bits read.
	(b) Hard Read Errors	: Less than one error per 10^{12} bits read.
	(c) Seek Errors	: Less than one error per 10^6 seeks
(4)	Media Life	: More than 3×10^6 passes/track
(5)	Media Insertions	: More than 3×10^4 times

The unit consists of the following components.

2-1 Magnetic Head

The single-side magnetic head uses a button type head and the double-side magnetic head uses a gimbal type, both using the tunnel erase method.

2-2 Head Positioning Mechanism

The head is positioned by the rotation of the stepping motor through the steel belt.

2-3 Head Load Mechanism for double-sided type only (Option)

The mechanical method by a small solenoid and return spring.

2-4 Disk Drive Mechanism

The diskette rotation mechanism uses the DC brushless direct-drive motor to directly rotate the spindle at 300rpm.

2-5 Read/Write and Control Electronics

The read/write and control electronics include the following circuits.

(1) Index/sector detection circuit
(2) Drive circuit for head-load solenoid
(3) Drive circuit for head positioning stepping motor
(4) Track 00 detection circuit
(5) Write enable notch detection circuit
(6) Read-write circiut
(7) Drive select circuit
(8) Side select circuit
(9) Spindle motor control circuit

The diagram for read/write and control electronics is shown in Fig. 2-2.

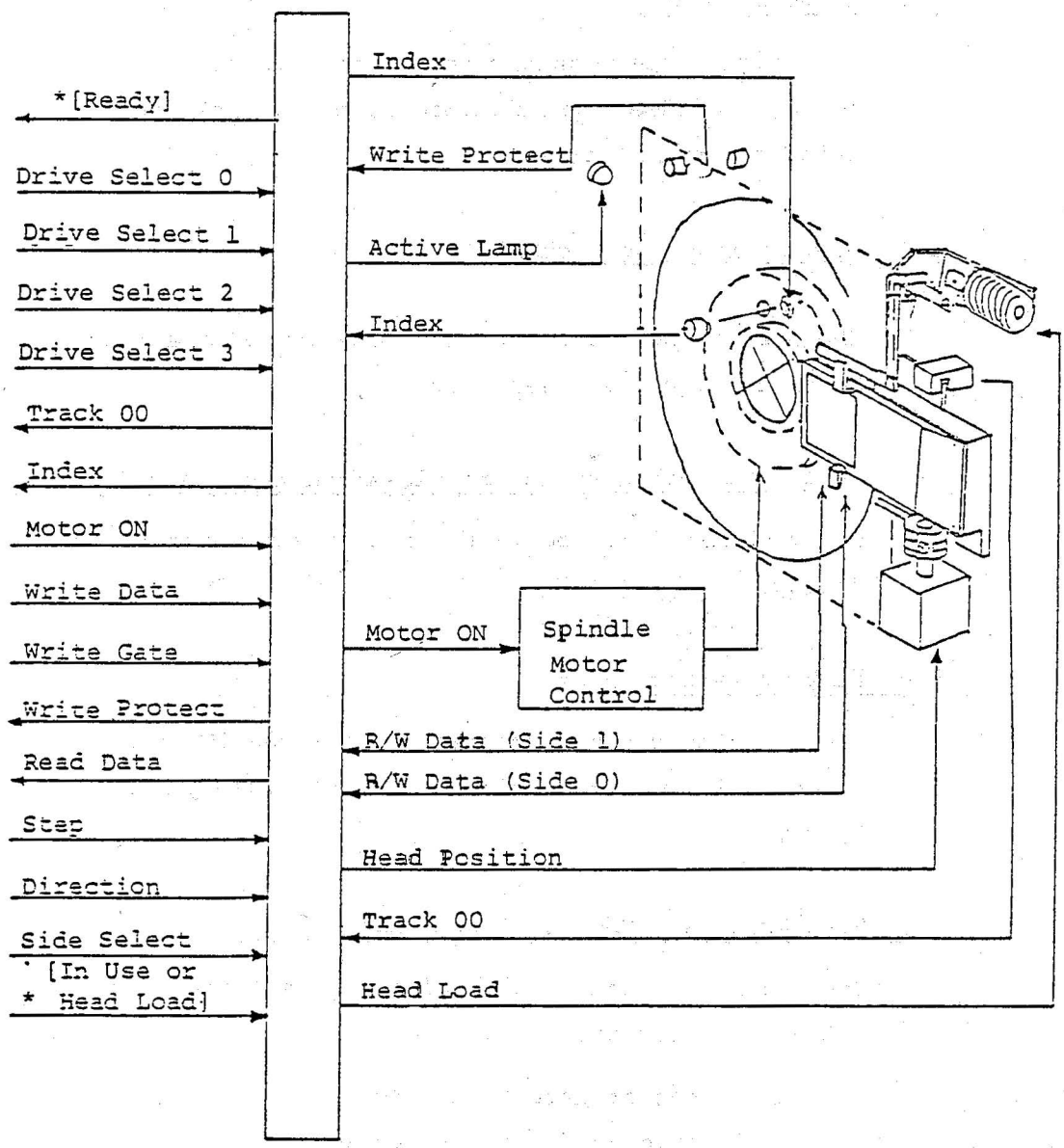

* Option

Fig. 2-1 Block Diagram

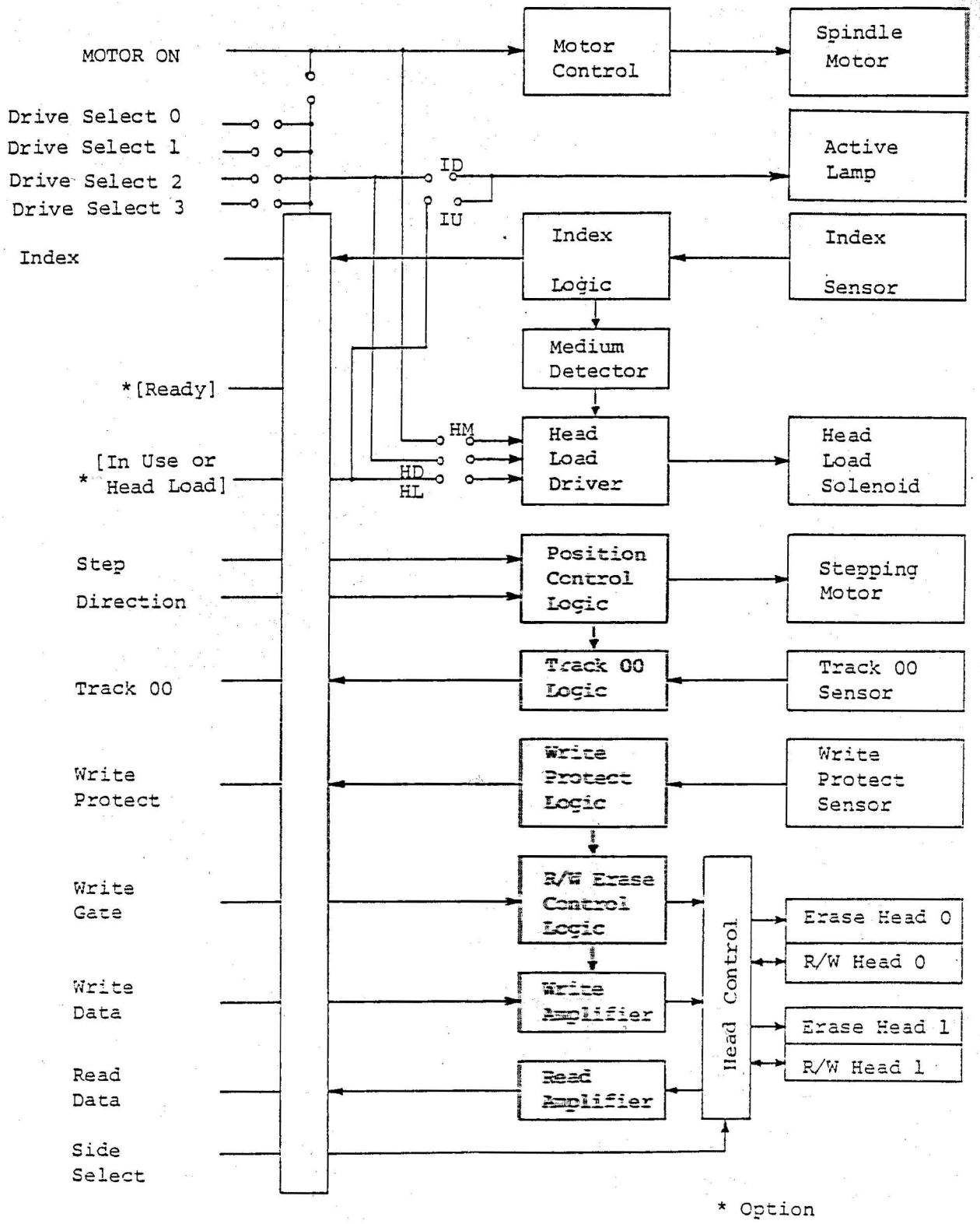

Fig.2-2 Electrical Block Diagram

The layout drawing of the interface is shown in Fig. 3-5. The interface is divided into a signal interface, power interface and frame ground.

3-1 Signal Interface

The signal line is negative logic TTL compatible.

(1) Input circuit See Fig. 3-1

(2) Output circuit See Fig. 3-2

(1) Input

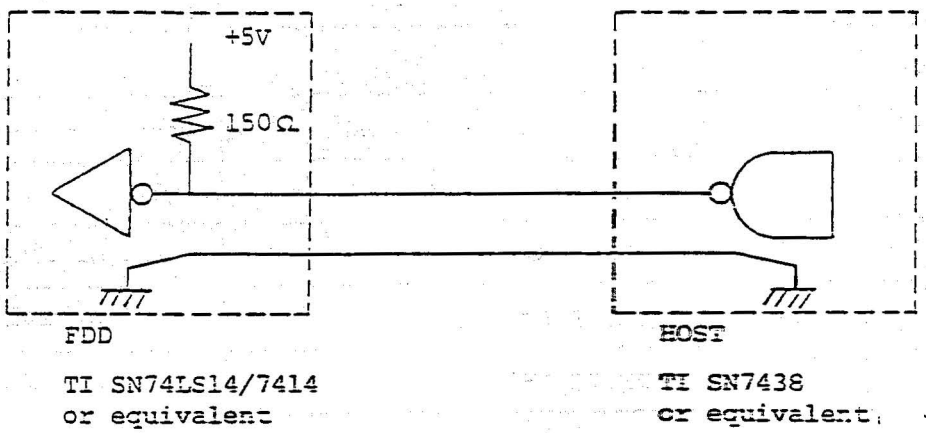

Fig. 3-1 Input

(2) Output

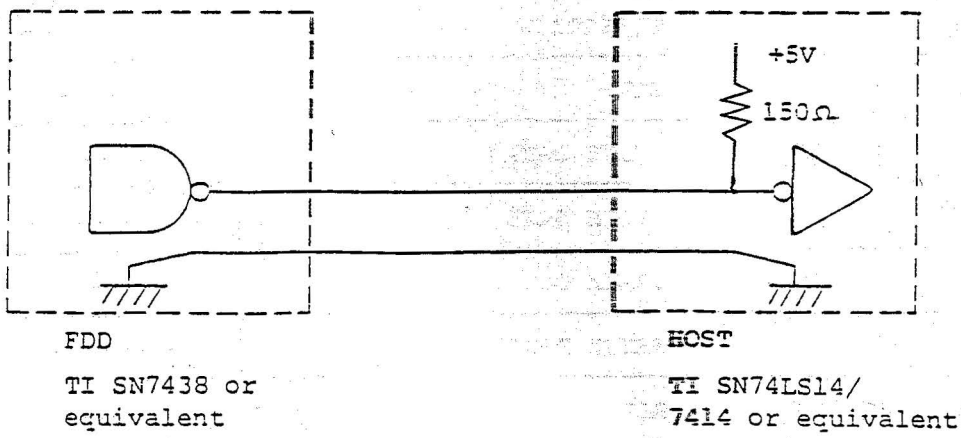

Fig. 3-2 Output

(3) Signal Level

(a) Input Signal Level

Low Level (True) : 0V~0.4V (Flow out current of less than 40mA)

High Level (False) : 2.5V~5.25V

(b) Output Signal Level

Low Level (True) : 0V~0.4V (Sink current of less than 48mA)

High Level (False) : 2.5V~5.25V

(4) I/O Signal and Pin Location

Pin No.		Signal Name	Signal Direction	
GND	Signal		FDD	HOST
1	2	NC		
3	4	*[IN USE OR HEAD LOAD]	←	
5	6	DRIVE SELECT 3	←	
7	8	INDEX		→
9	10	DRIVE SELECT 0	←	
11	12	DRIVE SELECT 1	←	
13	14	DRIVE SELECT 2	←	
15	16	MOTOR ON	←	
17	18	DIRECTION	←	
19	20	STEP	←	
21	22	WRITE DATA	←	
23	24	WRITE GATE	←	
25	26	TRACK 00		→
27	28	WRITE PROTECT		→
29	30	READ DATA		→
31	32	SIDE SELECT	←	
33	34	*[READY]		→

Table 3-3 I/O Pin Location Table

* Option

(5) Signal Connector

(a) Number of Pins 34

(b) Edge Card Connector on FDD

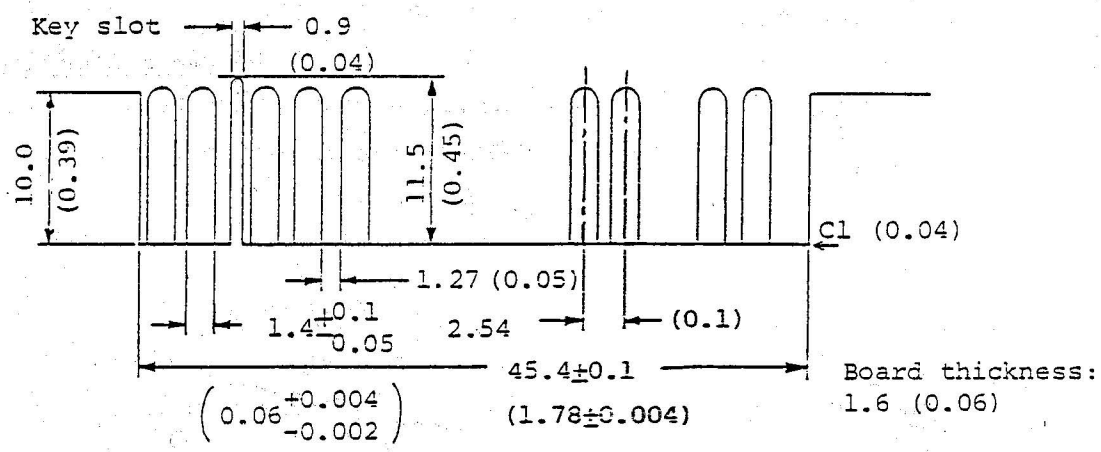

Fig. 3-4 Drawing of Edge Card Connector

NOTE: All dimensions are in mm. Dimensions in ( ) are in inches.

(c) Mating Connector : See Fig. 3-5.

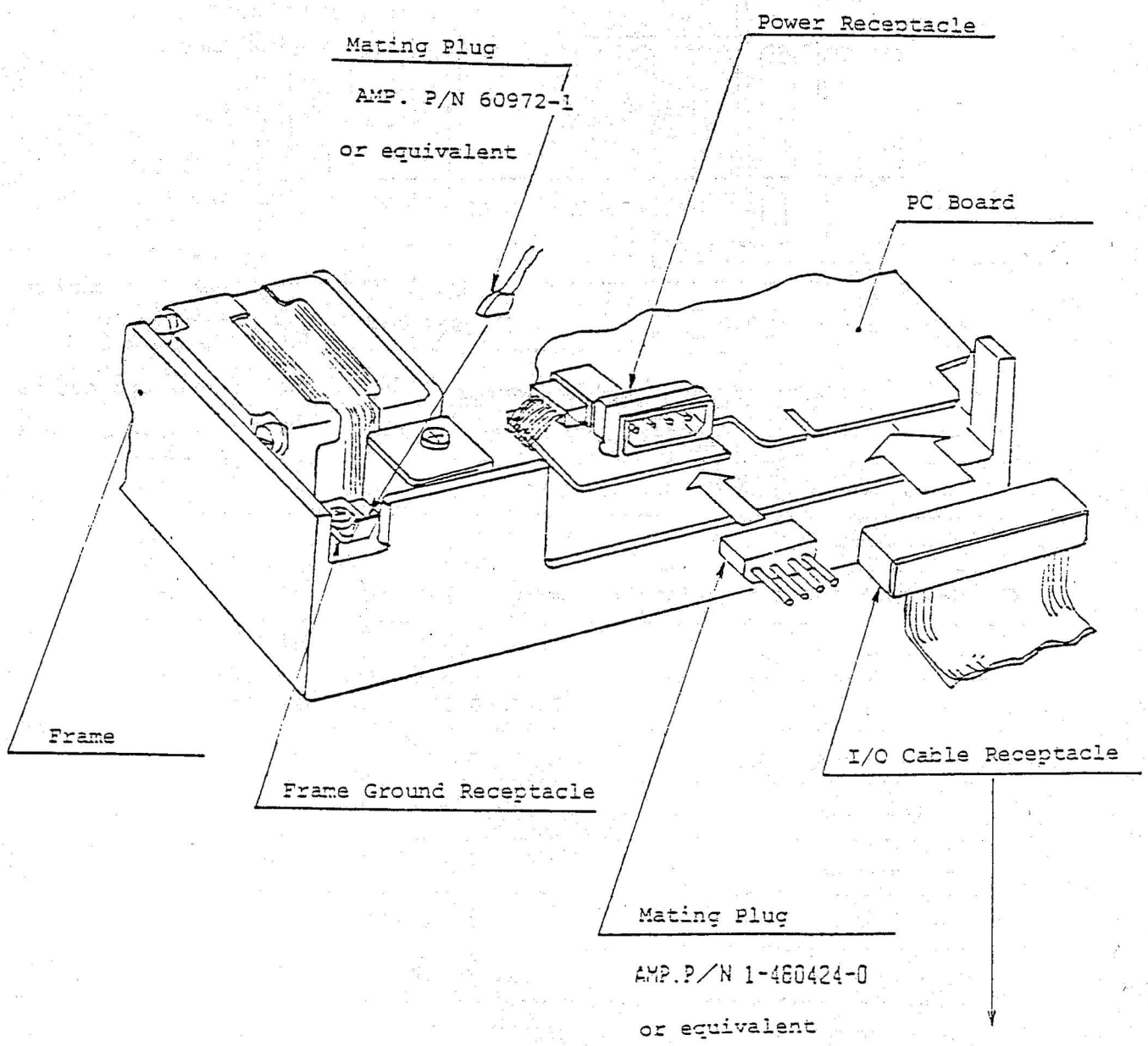

Twisted Cable : AMP → P/N 583717-5 (Housing); P/N 1-583616-1 (Pin); P/N 583274-1 (Keying plug)

Flat Cable : 3M → P/N 3463-0001 (Connector); P/N 3439-0000 (Keying plug)

Fig. 3-5 Interface Layout

3-1-1 Input Signal Lines (FDD ← HOST)

(1) DRIVE SELECT 0 - 3

When one of four lines becomes LOW, only the drive with LOW signal will respond to the input lines, gate the output lines and turn the Active Lamp (LED) on.
Up to four drives can be controlled, and DRIVE SELECT (0 ~ 3) is pre-determined by shorting plug. (See Fig. 5 - 3).

(2) DIRECTION

This line is a control signal which defines direction of R/W head motion. If the input signal is LOW, the R/W head will move towards the center of the disk (STEP IN).
Conversely, if the input signal is HIGH, the R/W head will move away from the center of the disk (STEP OUT).
Any change in the DIRECTION must be made before receiving STEP pulse. (For the timing chart, see Fig. 4-1.)

(3) STEP

This signal is to move the R/W head by one track per one pulse. After receiving the final STEP pulse, the drive must wait at least Seek + Settling time to enable Read/Write securely.

(4) SIDE SELECT

This signal defines which side of a two-sided diskette to be written on or read from.
When this signal is LOW, side 1 head is selected, and when HIGH, side 0 head is selected. When switching from one side to the other, the waiting time is required before read/write operation starts.
At the write operation, this signal must remain the same until the tunnel erasure is completed. (For the timing chart, see Fig. 4-2.)

(5) WRITE GATE

LOW level enables write data to be written on the diskette. This signal becomes ineffective when WRITE PROTECT signal is LOW or the drive is not selected. HIGH level enables the reading of data on the diskette. (For the timing chart, see Fig. 4-4.)

[illegible] to be written on the diskette. Each [illegible] to LOW of the FM/MFM signal will reverse the current through the R/W head, thereby writing a data bit. This line is enabled when WRITE GATE is LOW, WRITE PROTECT is HIGH and DRIVE SELECT is LOW. (For the timing chart, see Fig. 4-5.)

(7) MOTOR ON

When this signal is LOW, the spindle motor rotates and when HIGH, the motor stops. The spindle motor reaches the rated speed within 0.5 second (For the timing chart, see Fig. 4-2.). This line responds to the input signal regardless of the DRIVE SELECT signal.

(8) HEAD LOAD (Option for double-sided version only)

The HEAD LOAD version can select one of the HEAD LOAD, DRIVE SELECT, and MOTOR ON input signals. The HEAD LOAD input signal line (pin 4) is used for either the HEAD LOAD or IN USE described below. When this input signal line is turned to the low level while the disk is normally rotating, the R/W head begins to load onto the diskette, getting ready to read or write data. The set-up time of the solenoid is required before using this signal. (For the timing chart, see Fig. 4-4.)

(9) IN USE (Option)

When DRIVE SELECT signal is low, LOW level of this line will turn the LED on and HIGH will turn the LED off.

3-1-2 Output Signal Lines (FDD → HOST)

(1) INDEX

The LOW signal is provided by the drive once each revolution of the diskette to indicate the beginning of the track.

(2) READ DATA

This line provides clock + data pulses which are converted from analog data detected by a R/W head.

(3) TRACK 00

The LOW state of this signal indicates that the R/W head is positioned at track 00.

(4) WRITE PROTECT

The LOW signal indicates that a write protected diskette is installed.
The drive will inhibit writing with a write protected diskette.

(5) READY (Option)

The LOW signal indicates that the diskette is rotating after properly inserted.

3.2 Power Interface

Power Connector

(a) Number of Pins : 4

(b) Power Connector Pins : See Fig. 3-6

(c) Mating Plug (Host Side) : AMP P/N 1-480424-0

(d) Mating Pin (Host Side) : AMP P/N 170148-2 (AWG18 ~ 24)
AMP P/N 170121-4 (AWG14 ~ 20)

3.3 Frame Ground

Mating Terminal (Host Side) : AMP P/N 60972-1

NOTE: Use AWG24 or thicker cable for the power cable and ground cable.

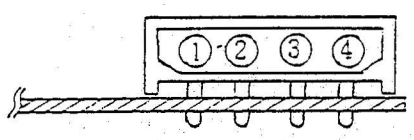

PC board

1 PIN ------ DC +12V
2 PIN ------ OV RETURN (GROUND)
3 PIN ------ OV RETURN (GROUND)
4 PIN ------ DC +5V

Fig. 3-6 Power Connector Pins

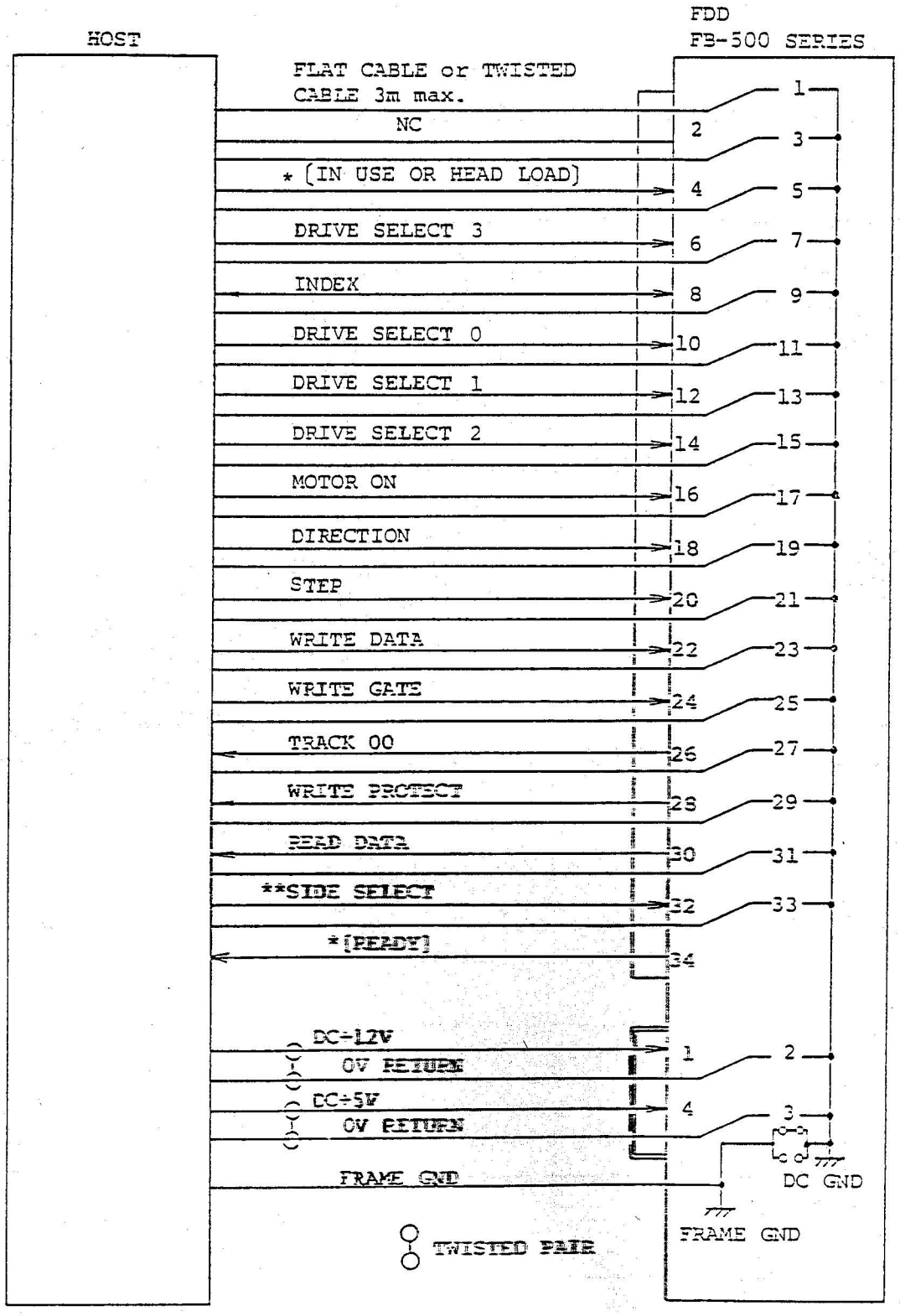

* OPTION

** For the single side models (FB-501,502), this pin (32) must be open.

Fig. 3-7 Interface Connections

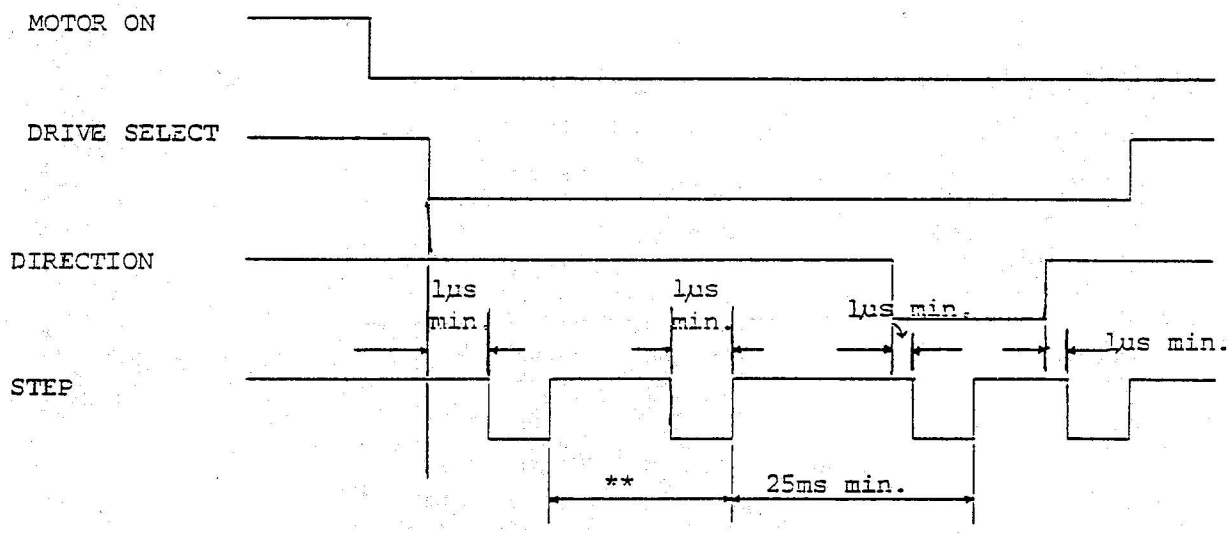

** = Seek Time
FB-501,503 6(ms) min.
502,504 3(ms) min.

Fig. 4-1 Track Access Timing

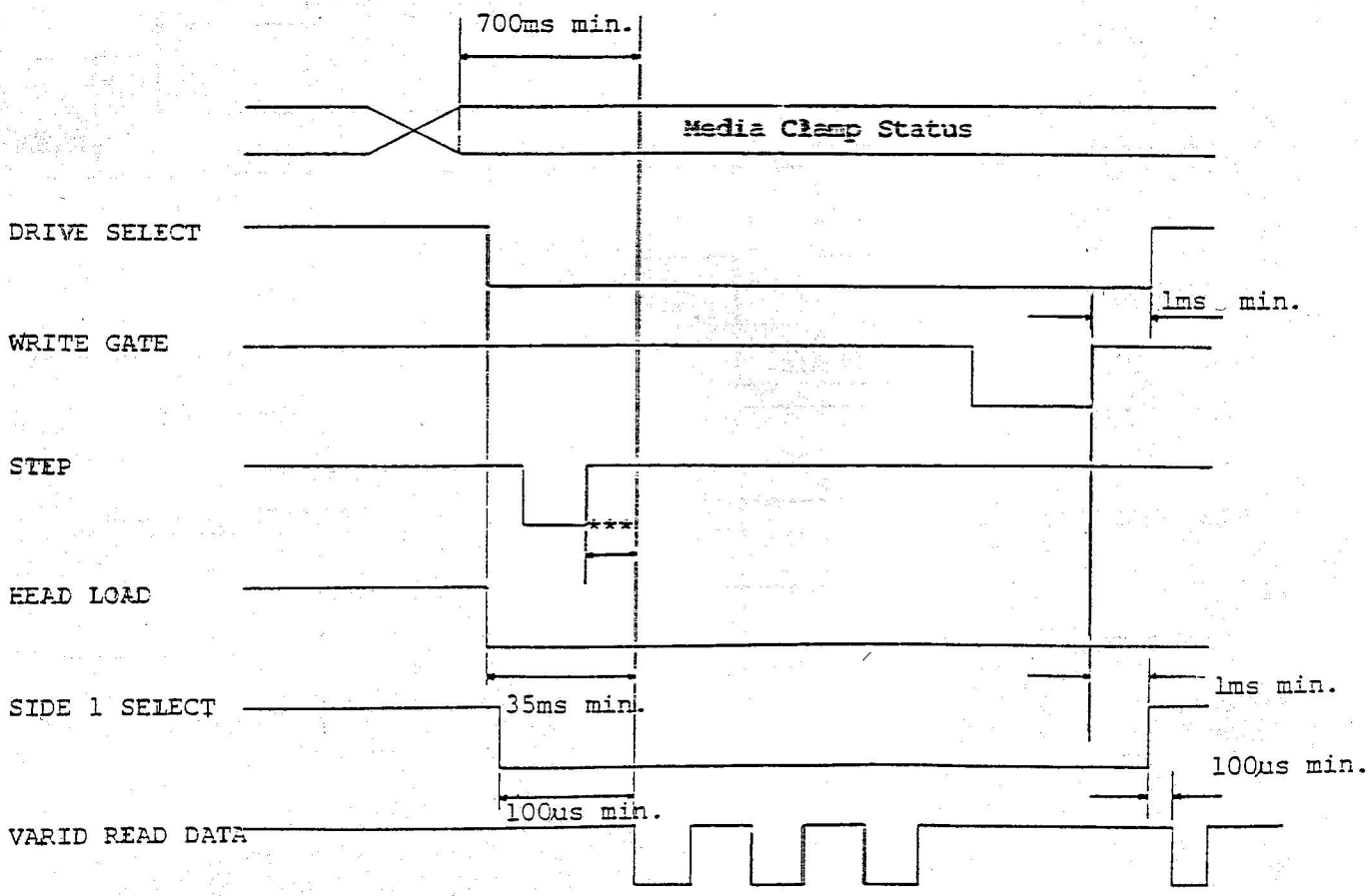

Fig. 4-2 Read Timing

*** = Seek Settling Time
FB-501,503 21(ms) min.
502,504 18(ms) min.

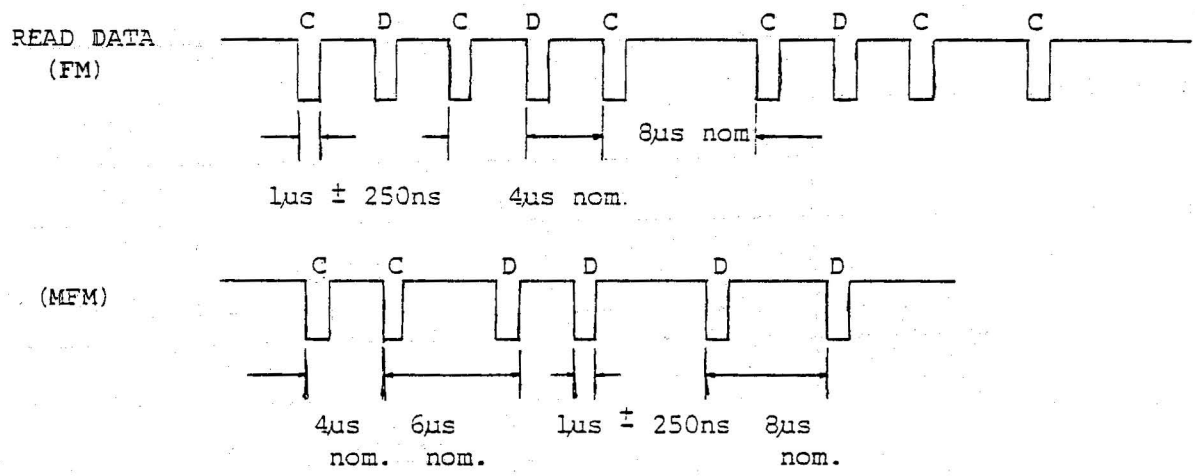

Fig. 4-3 READ DATA Timing

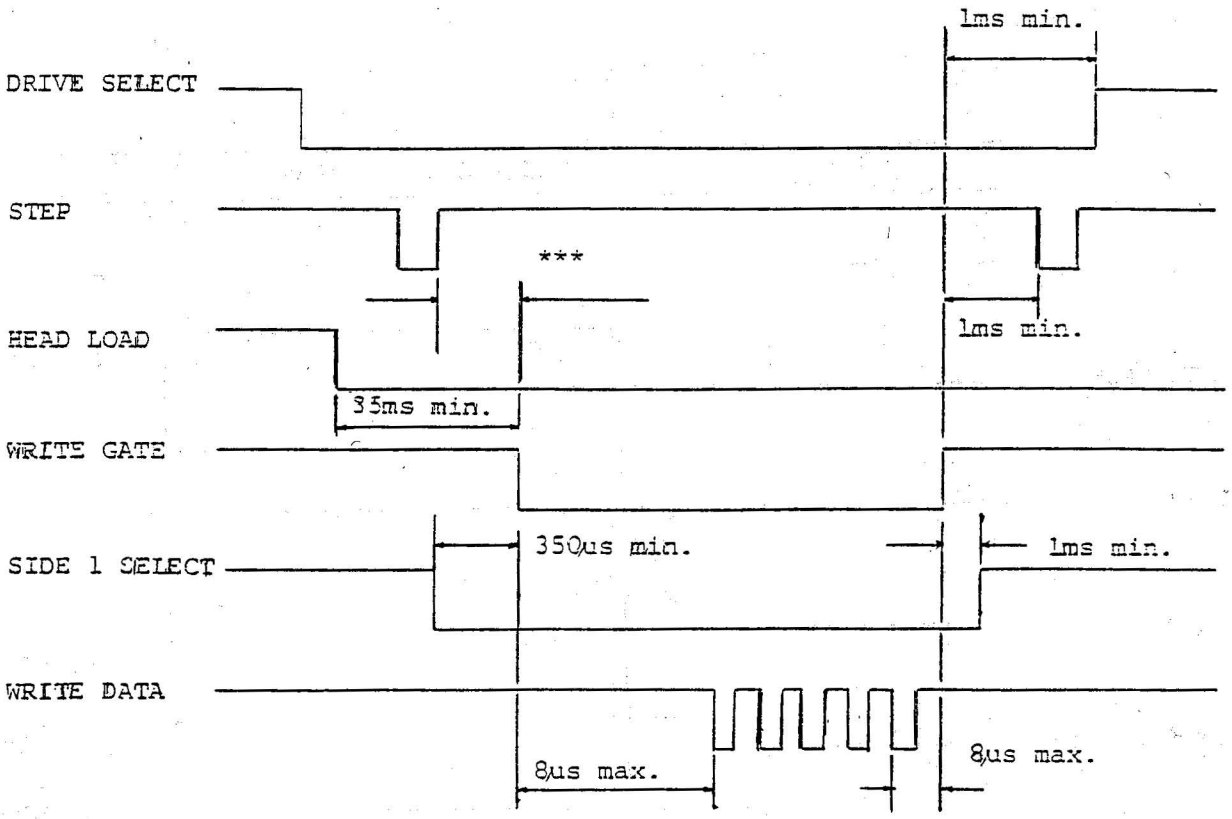

*** = Seek Settling Time
FB-501,503 21(ms) min.
502,504 18(ms) min.

Fig. 4-4 Write Timing

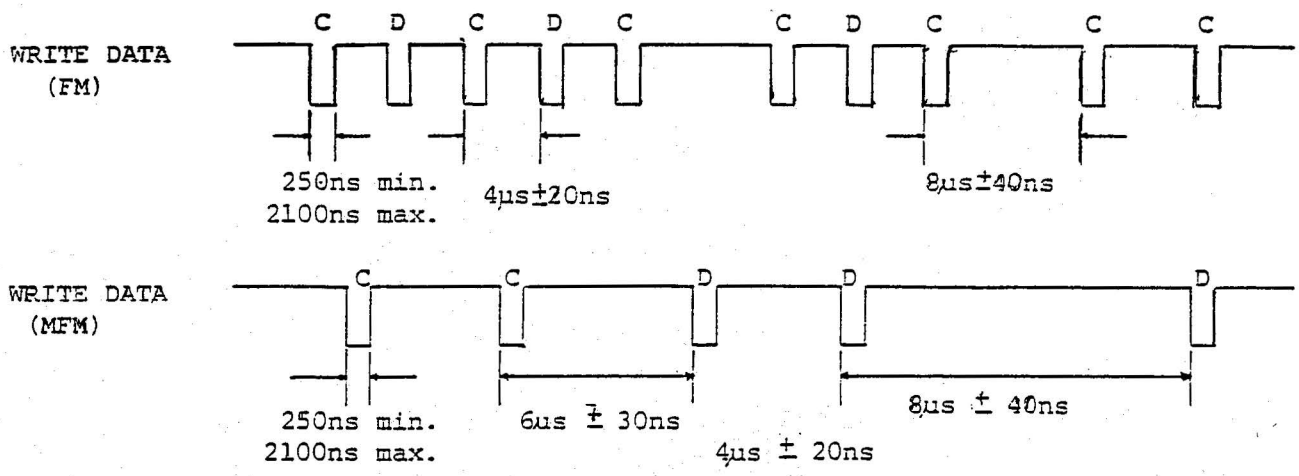

Fig. 4-5 WRITE DATA TIMING

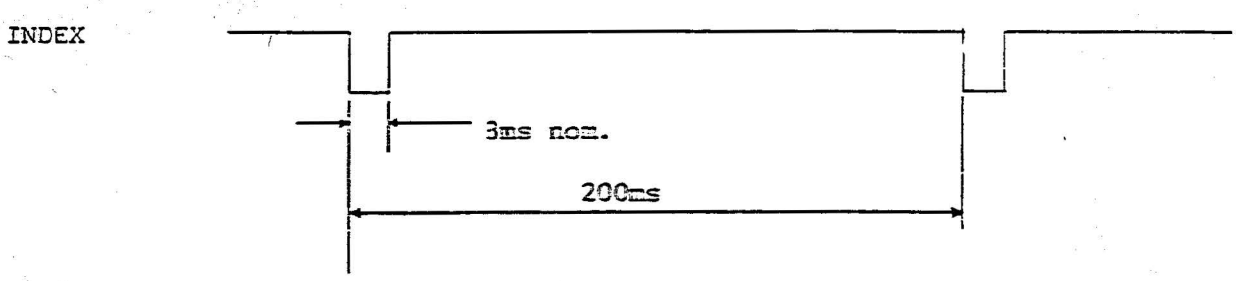

Fig. 4-6 INDEX TIMING

CHAPTER 5 SELECT PIN SETTING

5-1 Input Signal Termination

An FB-500 drive can be connected to the host CPU using either a daisy-chain (serial) connection or a radial (parallel) connection. Each drive has the line termination network (terminator). As shipped from the factory, the terminator is installed on each drive. Remove this network when not necessary. Daisy chain and radial chain are shown in Fig. 5-1 and 5-2 while the location of terminator is shown in Fig. 5-3.

5-2 FDD Number Shorting plug (DS0 to DS3)

The address of each drive is determined by the location of shorting plug. As shipped from the factory, a shorting plug is installed on DS0. (See Fig. 5-3)

5-3 Shorting Plug for Testing (MX)

The output signal is always effective regardless of the DRIVE SELECT 0∼3 signals. (See Fig. 5-3)

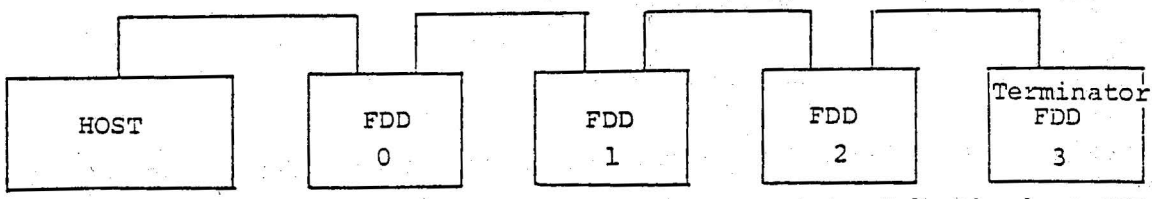

Only the last FDD in a daisy-chain connection must have the line terminator installed.

Fig. 5-1 Daisy Chain

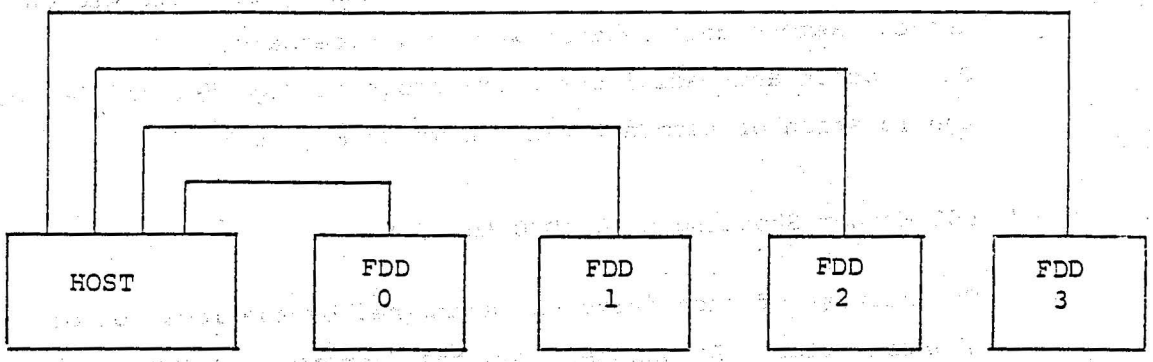

Fig. 5-2 Radial Chain Method

Each FDD must have the line terminator installed.

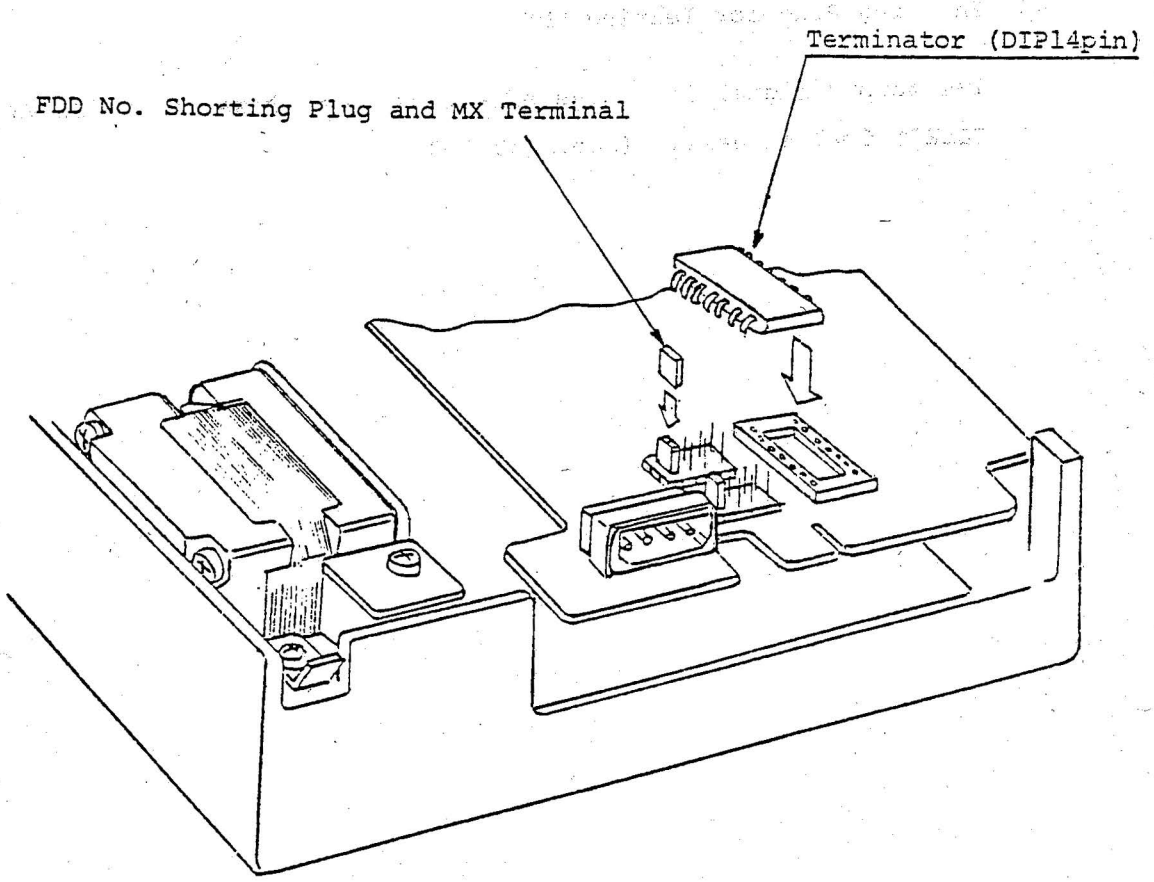

Fig. 5-3 FDD No. Setting and Terminator

RADIO SHACK, A Division of Tandy Corporation

U.S.A.: FORT WORTH, TEXAS 76102
CANADA: BARRIE, ONTARIO L4M 4W5

AUSTRALIA	BELGIUM	FRANCE	U. K.
91 Kurrajong Avenue Mount Druitt, N.S.W. 2770	Rue des Pieds d'Alouette, 39 5140 Naninne (Namur)	BP 147-95022 Cergy Pontoise Cedex	Bilston Road Wednesbury West Midlands WS10 7JN

MS2601070-12/85 **Printed in U.S.A.**